JANUARY 2022

IN COMPLIANCE™

THE COMPLIANCE INFORMATION RESOURCE FOR ELECTRICAL ENGINEERS

Continuing Your Professional Education in 2022

PLUS

Failures Caused by Ground Potential Rise at Interconnected Houses

Navigating the "Safety Hierarchy"

A Recipe for Success: How to Grow from EMC Novice to EMC Expert

INCOMPLIANCE

The Premium Digital Edition

Whether you read In Compliance Magazine in print or online, we are committed to providing you with the best reading experience possible.

Our digital edition presents a responsive, interactive, and user-friendly version of the magazine on any device. Check us out online for exclusive bonuses.

HTTPS://DIGITAL.INCOMPLIANCEMAG.COM

The EERC™

electrical engineering resource center

Visit **incompliancemag.com/EERC** to access your free resources today!

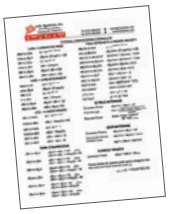

EMC RELATED FORMULAS

application note provided by

A.H. Systems, Inc.

AC VS. DC HIPOT TESTING: WHAT'S BEST FOR YOU?

video provided by

ASSOCIATED RESEARCH AN IKONIX BRAND

EMI DEBUGGING WITH OSCILLOSCOPES

application note provided by

ROHDE&SCHWARZ

EMC STANDARDS OVERVIEW

white paper provided by

UNDERSTANDING PRESELECTION IN EMI RECEIVERS

application note provided by

ROHDE&SCHWARZ

HIPOT TESTING OF MILITARY/AEROSPACE INTERCONNECT COMPONENTS

white paper provided by

VITREK

SAFE WORKSTATION BEST PRACTICES

application note provided by

ASSOCIATED RESEARCH AN IKONIX BRAND

In Compliance Magazine
ISSN 1948-8254 (print)
ISSN 1948-8262 (online)
is published by

Same Page Publishing Inc.
451 King Street, #458
Littleton, MA 01460
tel: (978) 486-4684
fax: (978) 486-4691

IN COMPLIANCE

editor/publisher Lorie Nichols
lorie.nichols@incompliancemag.com
(978) 873-7777

business development director Sharon Smith
sharon.smith@incompliancemag.com
(978) 873-7722

production director Erin C. Feeney
erin.feeney@incompliancemag.com
(978) 873-7756

marketing director Ashleigh O'Connor
ashleigh.oconnor@incompliancemag.com
(978) 873-7788

circulation director Alexis Evangelous
alexis.evangelous@incompliancemag.com
(978) 486-4684

features editor William von Achen
bill.vonachen@incompliancemag.com
(978) 486-4684

senior contributors
Bruce Archambeault
bruce@brucearch.com

Keith Armstrong
keith.armstrong@cherryclough.com

Leonard Eisner
Leo@EisnerSafety.com

Daryl Gerke
dgerke@emiguru.com

Ken Javor
ken.javor@emcompliance.com

Ken Ross
kenrossesq@gmail.com

Werner Schaefer
wernerschaefer@comcast.net

columns contributors
EMC Concepts Explained
Bogdan Adamczyk
adamczyb@gvsu.edu

Hot Topics in ESD
EOS/ESD Association, Inc
info@esda.org

On Your Mark
Erin Earley
eearley@clarionsafety.com

advertising For information about advertising contact Sharon Smith at sharon.smith@incompliancemag.com.

subscriptions In Compliance Magazine subscriptions are free to qualified subscribers in North America. Subscriptions outside North America are $129 for 12 issues. The digital edition is free. Please contact our circulation department at circulation@incompliancemag.com

PRINTED WITH SOY INK

JANUARY 2022

Volume 14 | Number 1

CONTENTS

FCC Expands Space Access for IoT Support

The U.S. Federal Communications Commission (FCC) has granted a French satellite company permission to provide satellite-based connectivity services for Internet of Things (IoT) devices.

According to a press release issued by the FCC, the company, Kinésis, proposed the deployment of a constellation of 25 small, low-Earth orbit satellites and was seeking permission from the FCC to offer its services in the U.S. market using frequencies of the non-voice, non-geostationary (NVNG) mobile-satellite service (MSS) and earth exploration-satellite service (EESS).

In an Order and Declaratory Ruling, the Commission granted Kinésis market access in the 399.9-400.05 MHz and 401-403 MHZ uplink bands, and the 400.15 401 MHz downlink band, subject to certain conditions. The approval is also subject to the outcome of future Commission proceedings, including its current proceeding on the growing concern over orbital debris.

EU Commission Updates List of Harmonized Standards for Toys

The Commission of the European Union (EU) has published an updated list of standards that can be used to demonstrate conformity with the essential requirements of its directive relating to the safety of toys (2009/48/EC).

According to the Directive, toys are defined as "products designed or intended…for use in play by children of less than 14 years of age." The scope of the Directive includes electric toys that are powered by a nominal voltage up to and including 24 V and requires sufficient protections for such devices to prevent the risk of electric shock and/or burns.

The most recently updated list of standards for the Directive was published in November 2021 in the Official Journal of the European Union and replaces all previously published standards lists for the Directive.

ANSI HAC Standard Now Recognized by the FDA and FCC

In its latest revised list of recognized consensus standards, the FDA has now included ANSI C63.19-2019 – American National Standard, Methods of Measurement of Compatibility between Wireless Communications Devices and Hearing Aids. The latest update to C63.19 harmonizes the standard's testing methodologies with current available international standards and is applicable to a wider range of frequencies.

In a further development, Canada's Innovation, Science and Economic Development (ISED) Department is updating its Radio Standard Specification, RSS-HAC – Hearing Aid Compatibility, to reference the 2019 version of C63.19. Issue 2 of the specification is currently in draft form.

As we reported earlier this year, the U.S. Federal Communications Commission (FCC) adopted ANSI C63.19-2019 as the standard to be used in assessing HAC-compatible handsets for compliance with the agency's certification requirements. The FCC's Report and Order announcing the decision provided handset manufacturers with a two-year transition period to adopt the requirements set forth in the standard.

EU Commission Seeks to Expand
RED Cybersecurity Requirements for IoT Devices

The Commission of the European Union (EU) is taking steps to specifically include the cybersecurity of internet-connected equipment under the scope of its Radio Equipment Directive (2014/53/EU, also known as RED).

Under the terms detailed in a preliminary draft of a Commission Delegated Regulation published at the end of October, the essential requirements set out in Article 3(3) of the RED will be applicable to "any radio equipment that can communicate itself over the internet, whether it communicates directly or via any other equipment."

While the RED's essential requirements will apply to most types of internet-connected radio equipment, equipment and devices specifically called out in the draft Delegated Regulation include:

- Radio equipment designed or intended exclusively for childcare;
- Radio equipment covered under the scope of the EU's Directive on the Safety of Toys (2009/48/EC);
- Radio equipment designed or intended to be worn, strapped to, or hung from any part of the human body or incorporated into any clothing worn by humans, such as headwear, handwear, or footwear;
- Radio equipment that enables the holder or user to transfer money, monetary value, or virtual currency.

Internet-connected equipment expressly not included under the expanded scope of cybersecurity requirements detailed in the draft Delegated Regulation include medical devices covered under the EU's Medical Device Regulation (EU 2017/745) and the In Vitro Diagnostic Medical Device Regulation (EU 2017/746). Also excluded are internet-connected equipment and devices used in civil aviation applications (EU 2018/1139) and in automotive systems and components (EU 2019/2144).

CONTINUING YOUR PROFESSIONAL EDUCATION IN 2022

Compiled by the *In Compliance Magazine* Staff

As the world gradually (and cautiously!) reopens after the past two years, we optimistically predict that 2022 will be like no other year in recent memory. Companies and industry professionals will *go bold* in exploring new ideas and pursuing previously unseen opportunities to bring new and innovative technologies to market. And, with supply chain workarounds taking effect, commercial and consumer markets will bounce back in ways that would have been the stuff of fantasies pre-pandemic.

In this promising time, your ongoing personal efforts to refresh or expand your professional and technical knowledge are more important than ever. So, as 2022 begins, we've once again queried training resources throughout our industry to provide you with an overview of free or affordable solutions to meet your training goals in the new year. In this article, you'll find sources of compliance-related seminars, workshops, and other types of training, offered live, including both virtual and in-person options, as well as pre-recorded webinars and on-demand training offerings.

The following information is current as we go to press (early December 2021). But please note that dates for live in-person seminars, workshops, and symposia provided here are subject to change. So check the listed websites for the most up-to-date information on scheduling. Finally, we invite you to submit updates and corrections as well as suggestions for additional listings for our Events section. Please send your comments to us at editor@incompliancemag.com.

LIVE VIRTUAL AND IN-PERSON SEMINARS AND WORKSHOPS

The **American Council of Independent Laboratories (ACIL)** hosts occasional live virtual webinars related to the Council's wide range of activities, including technical subjects, ACIL Committee activities, and laboratory business practices. For more information, go to http://www.acil.org and click on the word *Education* at the top of the page. (Also see listing under *Recorded Webinars and On-Demand Training*)

The **American Association for Laboratory Accreditation (A2LA)** WorkPlace Training portal offers virtual classroom training featuring live instructor-led sessions. There are more than twenty-five separate virtual training offerings, covering areas including international standards, management systems, technical subjects, and soft skills. Course instructors are subject matter experts with many years of professional training experience. Additional details are available at http://www.a2lawpt.org. (Also see listings under *In-House/Custom Seminars and Workshops* and *Recorded Webinars and On-Demand Training*)

Keith Armstrong of **Cherry Clough Consultants Ltd.** will be a featured presenter at the EMC & Compliance International 2022 program in Newbury, Berkshire (United Kingdom) on May 18-19, 2022, and will conduct the following workshops:

- Designing Interconnections for EMC (cables and connectors)
- Suppressing Electrostatic Discharge (ESD)
- Suppressing Surges/Transients on AC or DC Power, Signals or Data

For more information or to register, go to http://www.emcandci.com. (Also see listings under *In-House/Customer Seminars and Workshops* and Recorded Webinars and On-Demand Training)

This year, **Dangelmayer Associates** will virtually host and present its annual ESD workshop, ESD Best Practices for Technology Change. The workshop will be held the week of February 7, 2022.

Additional details and registration information is available at http://www.dangelmayer.com/training-workshops.php. Dangelmayer Associates will also present its multi-day ESD Auditor Certification Training in a virtual format in 2022. For additional information, go to http://dangelmayer.com/auditor-certification-course.php. (Also see listing under *Recorded Webinars* and *On-Demand Training*.)

Doug Smith of **D.C. Smith Consultants** will host virtual presentations of his workshop Lab Techniques, Robust Design, and Troubleshooting in several four half-day sessions throughout 2022. Visit his website at http://emcesd.com/bcsem_hfmeasv.htm for the most up-to-date information and the 2022 schedule. Doug also continues to co-host the EMC Week in Boulder City, Nevada (U.S.), dedicated to helping participants to learn everything they need to know about EMC design and testing. This year's virtual event is scheduled for April 18-22, 2022. Find additional details for EMC Week at http://emcesd.com/bcsem_emcweek.htm.

The **Equipment Reliability Institute** offers several live, in-person public classes throughout the year, including courses on Military Standard 810 Testing and Fundamentals of Random Vibration and Shock Testing. For complete information and 2022 training dates, go to http://equipment-reliability.com/open-courses. (Also see listing under *In-House/Custom Seminars and Workshops.)*

The **ESD Association** offers access to a wide variety of live virtual and in-person educational opportunities throughout the year to provide engineers with the knowledge and tools needed to meet the challenges of ESD in their companies. The Association co-sponsors regional tutorials with local chapters, conducts a national tutorial and education seminar in conjunction with the annual EOS/ESD Symposium and publishes and distributes numerous educational materials on ESD. For full details and their current schedule, visit the ESD Association's website at http://www.esda.org/training-and-education. (Also see listing under *Recorded Webinars and On-Demand Training*.)

ETS-Lindgren offers in-person and virtual training courses throughout the year. For information about course details and dates, visit their Events page at http://www.ets-lindgren.com/about-us/news-events. (Also see listings under *In-House/Custom Seminars and Workshops* and *Recorded Webinars and On-Demand Training*.)

Eurofins York offers classroom compliance training throughout the year at various locations in the United Kingdom. Find out more at http://www.yorkemc.com/services/training. (Also see listings under *In-House/Custom Seminars and Workshops*.)

Dr. Bogdan Adamczyk of **Grand Valley State University** will offer his live in-person, two-day certificate course for the industry on Principles of Electromagnetic Compatibility on April 28-29, 2022, and October 6-7, 2022, at the GVSU EMC Center in Grand Rapids, Michigan. Numerous measurements and demonstrations reinforce the course topics. The course is intended for both the practicing professionals and the new engineers entering the field. For additional details, go to http://www.gvsu.edu/emccenter.

The **IEEE EMC Society** offers access to a number of live webinars on a variety of EMC-related subjects. Go to http://www.emcs.org/virtual-and-webinar-events.html for more information. (Also see listing under *Recorded Webinars and On-Demand Training*)

Intertek offers live virtual and in-person public seminars and workshops throughout the year at various locations in the U.S. and around the world. Additional information is available at the company's *Knowledge and Education* portal at http://www.intertek.com/knowledge-education. (Also see listing under *Recorded Webinars and On-Demand Training*)

Daryl Gerke of **Kimmel Gerke Associates, Ltd.** continues to offer his popular EMC trainings on a synchronous virtual basis. His three-day course on Design for EMC focuses on EMC problems and how to identify, prevent, and fix more than forty common EMI/EMC problems at the equipment level. His other course, EMC in Military Systems, addresses issues stemming from four key EMC interfaces, grounding, shielding, power, and cables. For further details, visit http://www.emiguru.com/seminars. (Also see listing under *In-House/Custom Seminars and Workshops*)

Dr. Todd Hubing of **LearnEMC** will present two live virtual courses in early 2022, Electronic System Design for EMC Compliance and Power Electronics

Design for Electromagnetic Compatibility. These courses focus on fundamental concepts and tools that EMC engineers can utilize to avoid electromagnetic compatibility and signal integrity problems. For dates and additional details, go to http://learnemc.com. (Also see listing under *Recorded Webinars and On-Demand Training*)

Silent Solutions will offer several EMC courses during the first half of 2022. The virtual EMC courses, Applying Practical EMI Design and Troubleshooting Techniques and Advanced PCB Design for EMC & SI will be conducted online February 8-10th. Silent Solutions will also present three EMC courses live at Oxford University, Oxford (United Kingdom) May 9-13, 2022, including in-person versions of the two previously mentioned virtual courses as well as Mechanical Design for EMC. Visit http://www.silent-solutions.com to learn more. (Also see listing under *In-House/Custom Seminars and Workshops*)

TÜV SÜD America offers live virtual public training courses and webinars that are enhanced by the real-life experiences of its auditing and testing teams, offering years of experience in the worldwide international standards arena. These courses can help prepare you for the most challenging compliance issues. Visit their website at http://www.tuvsud.com/en-us/services/training/e-learning-courses to see the current offerings. (Also see listing under *Recorded Webinars and On-Demand Training*)

UL is currently offering live digital events, webinars, and other forms of virtual training in the U.S. and locations around the world. The world's most progressive and safety-conscious companies rely on UL's educational programs for the expertise and tools

Many experts and training organizations offer standard and/or customized workshops and seminars and workshops on an in-house basis. These training programs offer companies an opportunity to train multiple compliance personnel with a specialized approach designed for their needs.

required to design and install safer products, increase efficiency, realize improved speed to market, and advance their approach to prevention and compliance. A current listing of 2022 programs and dates is available at http://www.ul.com/events. (Also see listing under *Recorded Webinars and On-Demand Training*.)

Ken Wyatt of **Wyatt Technical Services, LLC** is an independent consultant specializing in EMC design, troubleshooting, and training services to commercial and industrial manufacturers with global distribution in the consumer, computer, network and telecommunications, industrial, and scientific industries. For further information on his public seminar schedule for 2022, visit http://www.emc-seminars.com/page6/Schedule.html. (Also see listing under *Recorded Webinars and On-Demand Training*.

IN-HOUSE/CUSTOM SEMINARS AND WORKSHOPS

Many experts and training organizations offer standard and/or customized workshops and seminars and workshops on an in-house basis. These training programs offer companies an opportunity to train multiple compliance personnel with a specialized approach designed for their needs. Following is a list of organizations and trainers that offer both virtual and in-person seminars and workshops for in-house presentation.

The **American Association for Laboratory Accreditation (A2LA)** also offers customized laboratory staff training on a number of topics. Go to http://www.a2lawpt.org for more information. (Also see listings under *Live Virtual and In-Person Public Seminars and Workshops* and *Recorded Webinars and On-Demand Training.)*

Vladimir Kraz of **BestESD Technical Services** provides customer-oriented classes and workshops on practical aspects of managing EMI, EOS, and ESD within the factory environment, using a results-based approach to provide participants with a fuller understanding of managed parameters. Classes and workshops are conducted on the customer premises and can include hands-on demonstration and training on actual tools and processes in production. Specifics include overview and compliance with SEMI E.176 standard and current ESDA work on EOS. For additional information, go to http://www.bestesd.com.

Keith Armstrong of **Cherry Clough Consultants Ltd.** offers an array of both in-person and virtual workshops and seminars on an in-house basis, covering a wide range of topics from his extensive training portfolio. Customized or more specialized virtual training for up to one thousand attendees is also available on request. For more information, go to http://www.cherryclough.com. (Also see listings under *Live Virtual and In-Person Public Seminars and Workshops* and *Recorded Webinars and On-Demand Training*.)

ETS-Lindgren offers customized trainings on various test and measurement topics for your engineers and test technicians. From standards updates to how to perform an acoustic, 5G, or EMC test and more, our customized offerings can help increase the knowledge and productivity of your team. For more information and a custom training quote, contact sales@ets-lindgren.com. (Also see listings under *Live Virtual and In-Person Public Seminars and Workshops* and *Recorded Webinars and On-Demand Training.)*

Equipment Reliability Institute also provides on-site training on a broad range of testing and design topics. For more information, go to http://www.equipment-reliability.com/onsite-courses. (Also see listing under *Live Virtual and In-Person Public Seminars and Workshops*.)

Eurofins York also offers customized, in-house training offerings in addition to their comprehensive schedule of public training programs. For additional details on their *bespoke* training options, go to http://www.yorkemc.com/services/training/on-site-training. (Also see listing under *Live Virtual and In-Person Public Seminars and Workshops.)*

Ikonix USA offers customized 1–4-day compliance training options at your site. For more information, go to https://www.ikonixusa.com/on-site-training-package.

Daryl Gerke of **Kimmel Gerke Associates, Ltd.** also offers his synchronous virtual courses Design for EMC and EMC in Military Systems on an in-house basis. For further details, visit http://www.emiguru.com/seminars. (Also see listing under *Live Virtual and In-Person Public Seminars and Workshops.)*

Mark Montrose of **Montrose Compliance Services** offers customized, in-house training programs and workshops on achieving EMC compliance and EMC design fundamentals and techniques. For more information, go to http://montrosecompliance.com.

Silent Solutions (http://www.silent-solutions.com) offers many of its live public seminars and workshops for private, in-house delivery and can also customize its offerings to address specific organizational needs and requirements. (Also see listing under *Live Virtual and In-Person Public Seminars and Workshops*.)

RECORDED WEBINARS AND ON-DEMAND TRAINING

Your time is valuable, and your schedule doesn't always allow you to participate in live virtual and in-person presentations. But there are plenty of training options that you can take advantage of, right from the

Your time is valuable, and your schedule doesn't always allow you to participate in live virtual and in-person presentations. But there are plenty of training options that you can take advantage of, right from the comfort of your daily workspace.

comfort of your daily workspace. Many organizations and training experts provide on-demand webinars, as well as books, podcasts, and e-learning programs. Here are a few options to get you started.

The **American Council of Independent Laboratories (ACIL)** also hosts an archive of previously recorded webinars that are available on-demand, covering EMC standards, key EMC committee meetings, and other EMC activity. Go to http://www.acil.org for more information. (Also see listings under *Live Virtual and In-Person Public Seminars and Workshops*.)

The **American Association for Laboratory Accreditation (A2LA)** offers a comprehensive suite of self-paced e-learning options through its WorkPlace Training portal. More than thirty different courses providing the equivalent of hundreds of hours of training are currently available, including online training on ISO/IEC 17025 compliance. More information is available at http://www.a2lawpt.org/e-learning. (Also see listings under *Live Virtual and In-Person Public Seminars and Workshops* and *In-House/Custom Seminars and Workshops*)

Keith Armstrong of **Cherry Clough Consultants Ltd.** provides a wide range of training course modules for assembling customized in-house webinars. PDF-formatted color course notes for these modules are available at http://www.emcstandards.co.uk/online-training. (Also see listing under *Live Virtual and In-Person Public Seminars and Workshops* and *In-House/Custom Seminars and Workshops*.)

Dangelmayer Associates presents complimentary live webinars throughout the year and has recordings of them on their site http://dangelmayer.com/webinar-videos.php. There are also excellent complimentary ESD demonstration videos on their site http://dangelmayer.com/esd-videos.php. (Also see listing under *Live Virtual and In-Person Seminars and Workshops*.)

EMC Fast Pass provides comprehensive online training courses and short courses to assist electronic engineers, compliance specialists, and hardware manufacturers design and test products that pass EMC and RF certifications the first time. Course offerings include:

- EMC Design for Compliance (Immunity)
- EMC Design for Compliance (Emissions)
- Intrinsically Safe (IS) Hardware Design
- FCC Wireless (RF) Pre-Compliance
- EMC Technician Training

Additional information is available at http://emcfastpass.com.

The **ESD Association**, in addition to its live virtual and in-person public seminars and workshops, also hosts online classes and training videos through the ESDA Online Academy at http://www.esda.org/training-and-education. (Also see listing under *Live Virtual and In-Person Public Seminars and Workshops*.)

Dr. Todd Hubing of **LearnEMC** also provides access to his on-demand online course Computer Modeling Tools for Electromagnetic Compatibility. This course reviews the latest computer modeling tools and techniques that can help engineers design products that are EMC compliant. For additional details, go to http://learnemc.com. (Also see listing under *Live Virtual and In-Person Public Seminars and Workshops* and *In-House/Custom Seminars and Workshops*.)

ETS-Lindgren also offers a number of previously recorded webinars that are available on-demand, covering topics such as EMC testing, wireless/5G testing, automotive testing (including e-motor and autonomous vehicles), and electromagnetic protection. Additional details about our on-demand offerings are available at http://www.ets-lindgren.com/services/education-training. (Also see listings under *Live*

Virtual and In-Person Public Seminars and Workshops and *In-House/Custom Seminars and Workshops*.)

The **IEEE EMC Society** also provides access to several on-demand recordings of recent presentations at Society and Chapter events. Further information is available at http://www.emcs.org/virtual-and-webinar-events.html. (Also see listing under *Live Virtual and In-Person Public Seminars and Workshops*.)

Intertek's extensive catalog of live and on-demand webinars complements the company's live virtual and in-person training options. Additional information is available at http://www.intertek.com/knowledge-education/webinars. (Also see listing under *Live Virtual and In-Person Public Seminars and Workshops*.)

NTS TESTalks provides access to free, on-demand videos on several aerospace and defense-related standards, including RTCA/DO-160, MIL-STD-810H, and MIL-STD-461G. The five-part video series on MIL-STD-461G covers key aspects of this important standard, including conducted and radiated emissions and susceptibility considerations. For more information, go to http://www.nts.com/nts-testalk.

Rohde & Schwarz offers a comprehensive selection of webinars, virtual demonstrations, and other remote learning options covering a wide variety of technical subjects. Learn more in their Knowledge Center at http://www.rohde-schwarz.com/us/knowledge-center/new-resources/overview_253060.html.

TÜV SÜD America offers on-demand webinars covering various topics in the areas of product safety, EMC, management systems, and competency assessments. Go to the TÜV SÜD Resource Center at http://www.tuvsud.com/en-us/services/training/e-learning-courses to learn more. (Also see listing under *Live Virtual and In-Person Public Seminars and Workshops*.)

UL also provides safety- and compliance-related training delivered via its extensive library of on-demand webinars. Topic areas include hazard-based safety engineering, global market access, and global directives, code compliance, conformity assessment, sustainability, responsible sourcing, and social auditing, and many more. For additional details, visit http://www.ul.com/events/on-demand-webinars.

Annual symposia are an excellent resource for extensive technical training, as well as the exchange of new ideas and technical concepts. The benefit of attending these events is that attendees can sample a vast array of workshops quickly and efficiently.

(Also see listing under *Live Virtual and In-Person Public Seminars and Workshops*.)

Ken Wyatt of **Wyatt Technical Services, LLC** offers several webinar- and video-based trainings. For more information, visit http://www.emc-seminars.com/page6/Schedule.html. (Also see listing under *Live Virtual and In-Person Public Seminars and Workshops*.)

INDUSTRY SYMPOSIA, CONFERENCES, AND EXHIBITS

Annual symposia are an excellent resource for extensive technical training, as well as the exchange of new ideas and technical concepts. The benefit of attending these events is that attendees can sample a vast array of workshops quickly and efficiently while connecting with colleagues and professionals with the same interests. (The symposia listed below are currently planned as live in-person events unless otherwise noted. Please check the listed website for up-to-date information on dates and locations.)

European Microwave Week 2022
February 13-18, 2022 – Excel London Exhibition & Conference Center, United Kingdom
http://www.eumweek.com

EMV 2022
March 15-17, 2022 – Cologne, Germany
http://emv.mesago.com/koeln/en.html

EuCAP 2022 – The 16th European Conference on Antennas and Propagation
March 27-April 1, 2022 – Madrid, Spain
http://www.eucap2022.org

A2LA Tech Forum 2022
April 3-6, 2022—Chantilly, Virginia (U.S.)
http://a2la.org/2022-tech-forum

DesignCon 2022
April 5-7, 2022 – Santa Clara, California (U.S.)
http://designcon.com

EMC mini 2022
April 19, 2022 – Fullerton, California (U.S.)
http://emcmini.us

2022 Asia-Pacific International Symposium on Electromagnetic Compatibility
May 8-11, 2022 – Beijing, China
http://apemc.org

2022 IEEE International Instrumentation and Measurement Technology Conference (I^2MTC)
May 16-19, 2022 – Ottawa, Canada
http://i2mtc2022.ieee-ims.org

EMC & Compliance International Exhibition & Workshops
May 18-19, 2022 – Newbury, Berkshire, United Kingdom
http://www.emcuk.co.uk

IMS 2022 – 2022 International Microwave Symposium
June 19-24, 2022 – Denver, Colorado (U.S.)
http://ims-ieee.org/ims2022

Sensors Expo & Conference
June 27-29, 2022 – San Jose, California (U.S.)
http://www.sensorsexpo.com

2022 IEEE International Symposium on Electromagnetic Compatibility, Signal and Power Integrity
August 1-5, 2022 – Spokane, Washington (U.S.)
http://www.emc2022.emcss.org

EMC Europe 2022
September 5-8, 2022 – Gothenburg, Sweden
http://www.emceurope2022.org

The Battery Show 2022, North America
September 13-15, 2022 – Novi, Michigan (U.S.)
http://thebatteryshow.com

44th Annual Electrical Overstress/Electrostatic Discharge Symposium
September 18-23, 2022 – Reno, Nevada (U.S.)
http://www.esda.org/events/44th-annual-eosesd-symposium-and-exhibits

2022 IEEE International Symposium on Product Compliance Engineering (ISPCE)
September 20-22, 2022 – San Diego, California (U.S.)
http://2022.psessymposium.org

44th Annual Meeting and Symposium of the Antenna Measurement Techniques Association (AMTA)
October 9-14, 2022 – Denver, Colorado (U.S.)
http://www.amta.org

2022 International Applied Computational Electromagnetics Society Symposium
Not yet scheduled. Check their website at http://www.aces-society.org for current information.

RF & Microwave 2022
Not yet scheduled. Check their website at http://www.microwave-rf.com for current information.

IEEE EMC SOCIETY 2022 REGIONAL EVENTS

2022 Chicago IEEE EMC Mini Symposium
May 10, 2022 – Itasca, Illinois (U.S.)
http://www.emcchicago.org/sectfiles/events.htm

EMC Fest 2022
May 12, 2022 – Livonia, Michigan (U.S.)
http://www.emcsociety.org/wp/?page_id=35

2022 Minnesota EMC Event
September 29, 2022 – Bloomington, Minnesota (U.S.)
http://www.mnemcevent.com

We hope this list will help you meet your professional development goals in 2022. Many additional trainings and events will be planned throughout the year, so be sure to check our events calendar at https://incompliancemag.com/event-directory to find the most up-to-date information. Another way to brush up on the basics and delve deep into advanced topics is by visiting our online resource center, the *In Compliance* **Electrical Engineering Resource Center (EERC),** at https://incompliancemag.com/eerc.

In the meantime, we hope that the year ahead brings only good health and happiness to you and your loved ones!

FAILURES CAUSED BY GROUND POTENTIAL RISE (GPR) AT INTERCONNECTED HOUSES

How Interconnects are a Path for Potential GPR-Caused Failures

Al Martin was a frequent contributor to *In Compliance Magazine* and the author or co-author of over 35 papers on EMC and telecommunications. He passed away in August 2021.

By Albert R. Martin

Editor's Note—We are grateful to the family of Al Martin for giving us permission to publish this article posthumously and to honor Al and all his contributions to our industry during his long and industrious career. We would also like to thank Mick Maytum and Joe Randolph for their assistance in preparing the initial draft for publication. Thanks to you all!

Much has been written about failures due to ground potential rise (GPR). So, is there anything more to say? Well yes. What has been written has generally been about single houses with multiple grounds. But often there is not just a single house, but multiple houses all potentially interconnected via a single piece of equipment. For example, in homes connected to a distribution point unit (DPU) (see Figure 1) the DPU is often a fiber-to-the distribution point (FTTdp) unit, or a digital subscriber line access multiplexer (DSLAM). So, what happens in this case?

Well, what could happen is insulation failure. This kind of failure was discussed in a 2011 study by the Japanese telecommunications company Nippon Telegraph and Telephone (NTT). That company had a problem. About 0.05% of their optical network terminal/home gateway ONT/HGW boxes stopped working due to insulation failure. Now 0.05% doesn't sound like much, but with 15 million installed devices, that amounted to 7500 units per year. Their research showed that the 0.05% failure rate corresponded to a 7.7 kV surge. Assuming that 0.05% (or less) is an acceptable failure rate, could GPR cause the corresponding 7.7 kV insulation failure?

Actual GPR measurements would give the best answer, but they don't exist. Instead, we'll proceed by modeling the various possibilities to see what they might predict.

CLASSICAL GPR

It may be helpful to begin with a bit of a review. In a uniform earth, a lightning strike creates a series of equipotential surfaces according to the following relation:

$$GPR = \frac{\rho I}{2\pi r}$$

where ρ is the ground resistivity, I is the lightning current, and r is the distance from the lightning strike. In the uniform earth case, GPR plots in

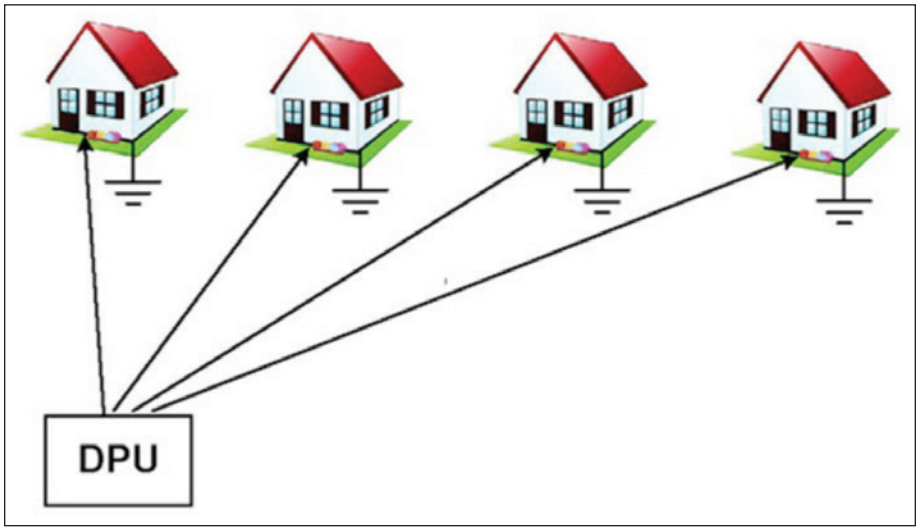

Figure 1: Possible connections of multiple houses to an FTTC distribution point

the pattern shown in Figure 2, which shows a series of equipotential surfaces of decreasing voltage ($V_1 > V_2 > V_3$, etc.).

Now suppose there are grounding points A and B located on different lightning-induced equipotential surfaces like those shown in Figure 3.

From the GPR analysis, we know that the voltage at point A is greater than the voltage at point B. Thus, equipment grounded at both point A and point B can have an internal voltage difference. If the voltage difference is big enough, insulation failure and possibly destructive current flow can occur.

So, let's see how this analysis can be extended to multiple houses, all potentially interconnected via a single piece of equipment.

CASES TO CONSIDER

To keep things manageable, consider two existing types of interconnected equipment: one in which the DPU is an FTTdp (also known as fiber to the curb, or FTTC), and the other is a DSLAM. These both use a twisted-pair POTS (plain old telephone service) line to connect the DPU to a house. The difference for GPR analysis is that for the FTTdp the maximum reach is 300 m, whereas the maximum reach of the DSLAM is 1000 m. The ground configurations can also be different.

GPR EFFECTS FOR MULTIPLE LOCATIONS WITH A MUTUAL CONNECTION

There are six cases to consider, comprising two main cases each with three subcases:

Case 1 in which both the DPU and the houses are grounded and connected by an unshielded twisted-pair POTS line (see Figure 4).

This case applies to both FTTdp and DSLAM. There are three subcases:

- Case 1a where there are no protectors installed on the POTS line
- Case 1b where one protector is installed on the POTS line
- Case 1c where there are protectors at both ends of the POTS line

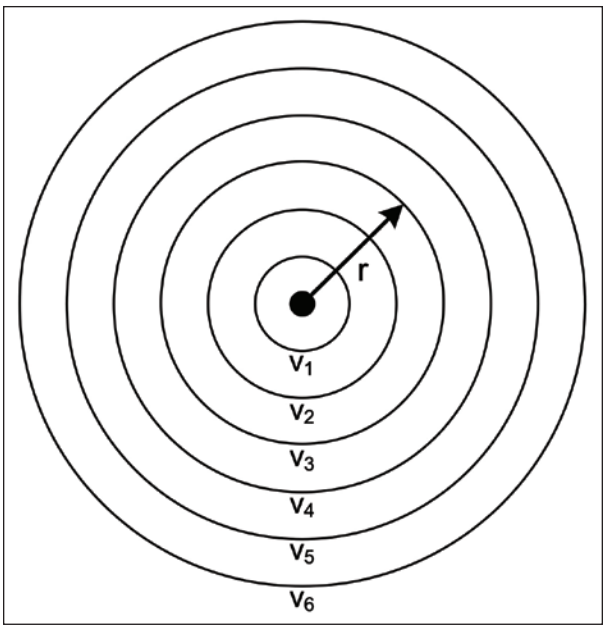

Figure 2: GPR for a uniform earth

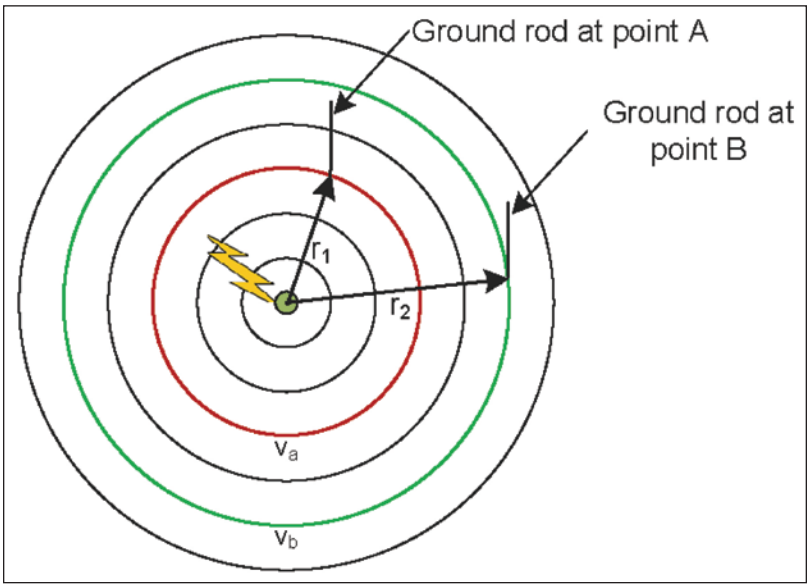

Figure 3: Possible location of grounds for house with two grounds

Case 2 in which the houses are grounded but the DPU is not, and the DPU is connected to the houses by an unshielded twisted pair POTS line (see Figure 8). This case applies to FTTdp only.

- Case 2a where there are no protectors installed on the POTS lines
- Case 2b where one protector is installed on one of the two POTS lines
- Case 2c where protectors are installed on the POTS lines at the houses

Case 1a: The DPU and the houses are grounded and connected by an unshielded twisted pair

Figure 4 illustrates Case 1a where there is a house connected to the DPU, but there are no protectors installed on the POTS line under consideration.

In this figure:

- Rg_1 is the ground resistance between the lightning strike point and the nearest ground rod (#1)
- Rg_2 is the ground resistance between the farthest ground rod (#2) and infinity
- Zr_1 is the impedance of ground rod #1
- Zr_2 is the impedance of ground rod #2
- R_t is the resistance of the twisted pair
- L_t is the inductance of the twisted pair
- Vr_1 is the voltage across ground rod #1
- Vr_2 is the voltage across ground rod #2

In order to do the calculations, we need to make some assumptions. These are:

1. The lightning flash is a 30 kA 4.5/75 median lightning surge from CIGRE TB549.
2. The lightning flash is 50 m from the DPU.
3. The maximum distance of the FTTdp from a house is 300 m
4. The maximum distance of the DSL from a house is 1000 m
5. The minimum distance of both FTTdp and DSL from a house is 10 m
6. A 22 AWG twisted pair is the connection between the DPU and the house

A uniform ground of resistivity ρ of 400 ohm-m (about average, according to MIL-HDBK-419).

7. An 8-foot 5/8-inch diameter ground rod

The ground rod impedance Z_r for calculating peak voltage was given in [2] as

$$Z_r = \frac{A\rho\left[\arcsin\left(\frac{2s}{d}\right)\right]}{180\pi s}\left[ln\left(\frac{4s}{a}\right) - 1\right] \quad (1)$$

where s is the length of the ground rod, a is its diameter, and d is the distance from the lightning strike to the ground rod.

From Grcev [3]:

$$A = \alpha s + \beta \quad (2)$$

$$\alpha = 0.025 + exp\,[-0.82\,(\rho \cdot T_1)^{0.257}] \quad (3)$$

$$\beta = 0.17 + exp\,[-0.22\,(\rho \cdot T_1)^{0.555}] \quad (4)$$

From the assumptions, ρ = 400 ohm-m and T_1 = 4.5 μs. For these values

α = 0.0286

β = 0.170

A = 0.240

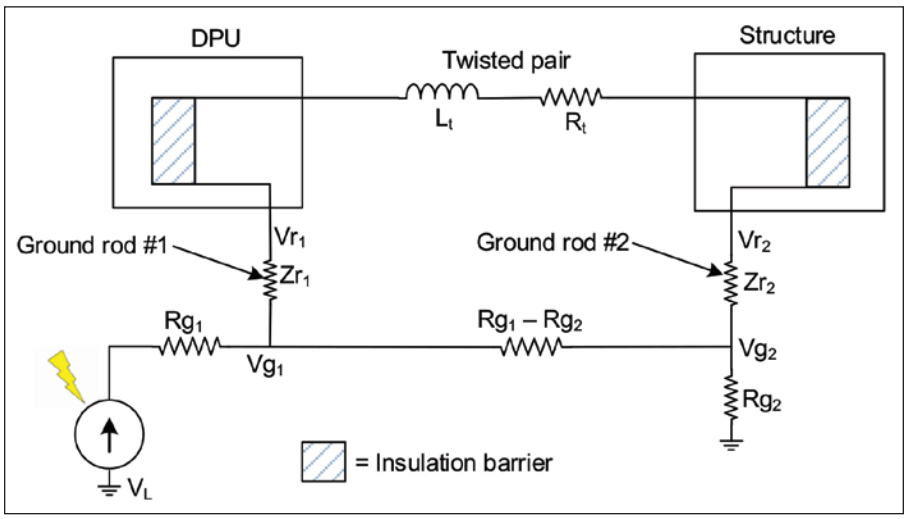

Figure 4: Case 1a: A house connected to the DPU

For this case, no overvoltage protection is present either at the DPU or at the houses. Based on all the assumptions, Table 1 shows the values for the elements in Figure 4. Table 1 also shows the results of the Vr_1 - Vr_2 GPR calculation, run for 10 m, 50 m, 300 m, and 1000 m to cover the range of the separation distances. The peak voltage difference $Vr_1 – Vr_2$ is between the DPU and the house. The results are unchanged if more than one house is connected to the DPU.

Element	10 m	50 m	300 m	1000 m
L_t (μH)	0.227	1.135	6.81	22.7
R_t (ohms)	0.53	2.65	15.9	53
Rg_1 (ohms)	2.52			
Rg_2 (ohms)	2.1	1.26	0.36	0.13
Zr_1 (ohms)	2.5			
Zr_2 (ohms)	2.08	1.25	0.36	0.12
Rg_1 - Rg_2 (ohms)	0.42	1.26	2.16	2.39
Vr_1 - Vr_2 (kV/kA)	0.33	1	1.7	1.8

Table 1: Values for the elements in Figure 4, and calculation results

For a median strike, TB549 Table 3.5 shows a lightning current of 30 kA, which in this case would produce the peak voltage difference shown in Table 2.

Element	10 m	50 m	300 m	1000 m
Vr_1 - Vr_2 (kV)	10	30	51	54

Table 2: Peak GPR voltages for a 30kA lighting strike, based on Table 1

The insulation barriers shown in Figure 4 are in series, so the sum of the voltage withstand for the two barriers must be exceeded for failure to occur. Dynamically, the voltage sharing of the two barriers will also be influenced by their capacitance values. Insulation failure could be caused by punch-through at a weak spot in the insulation or by inadequate creepages and clearances, as pointed out in [6]. Punch-through might not occur until the surge voltage reaches 8 kV. So, in that event, the GPR would potentially have to exceed 16 kV for failure to occur. If inadequate creepage or clearance is the issue, a lower GPR might cause failure. If any of this happens, this case becomes Case 1c.

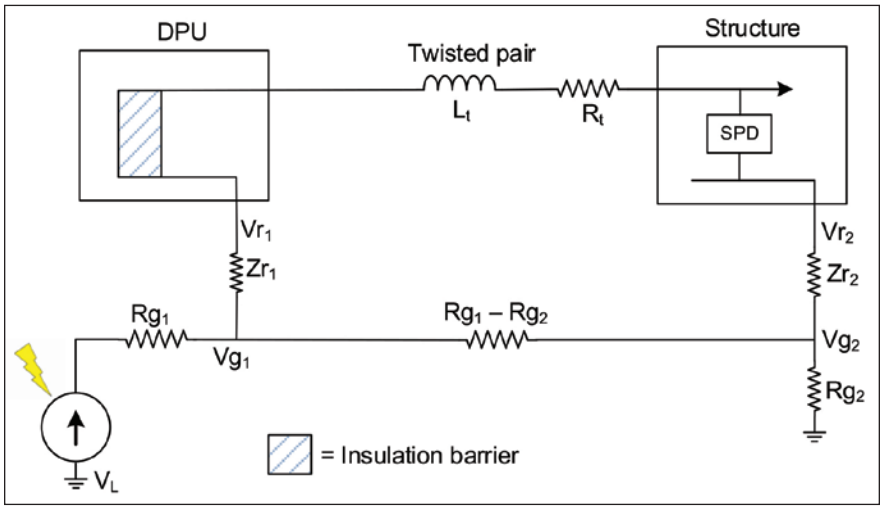

Figure 5: Same as Figure 4, except with one SPD activated (shown as a short)

Case 1b: Like Case 1a, except that one protector is installed on the POTS line

This case is similar to that illustrated in Figure 4, with the addition of one protector installed on the POTS line.

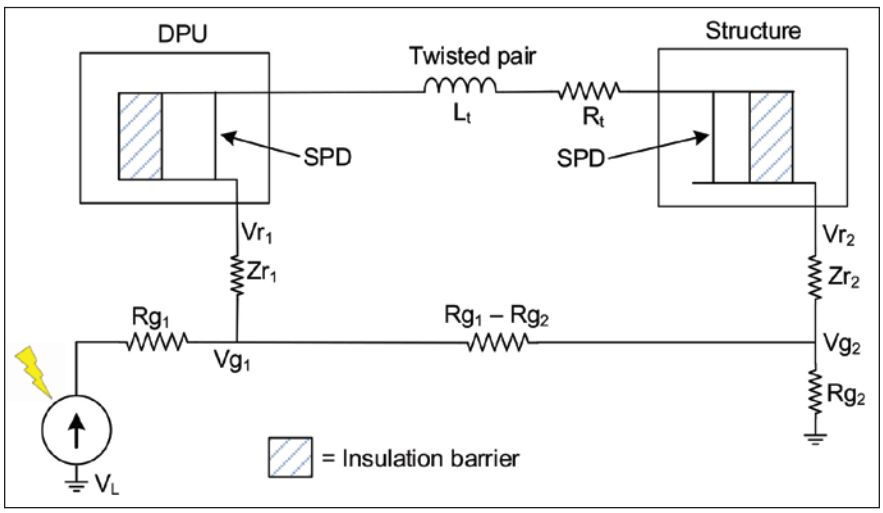

Figure 6: Connections like Figure 4, but with both SPDs activated

The calculated results for this case are the same as those for

Case 1a since current won't flow unless the insulation barrier (shown at the DPU) is broken down and the SPD is activated. So Table 1 and Table 2 apply here. The difference between the two cases is that, in Case 1a, the surge voltage needs to overcome two insulation barriers, whereas in Case 1b, the surge voltage needs only to overcome an insulation barrier and the SPD activation voltage. So, the system failure voltage for this case is generally substantially less than for Case 1a. If the insulation barrier does fail and the SPD is activated, this case becomes Case 1c.

Case 1c: Connections similar to Figure 4, but with both SPD activated

The connections in this case are similar to the ones shown in Figure 4, but with sufficient GPR to activate both SPDs or, in Case 1a or 1b, enough GPR voltage to cause the insulation barriers to fail. Assuming that happened, the result is shown in Figure 6 as shorts. Now there is a connection from the DPU to the houses via the twisted pair, so current (I_{TWP}) can flow between the two.

The calculated results for this case are shown in Table 3 and Table 4.

For a median strike, TB549 Table 3.5 shows a lightning current of 30 kA, which in this case would produce the peak voltage difference shown in Table 4.

Case 1c extended: Connections similar to Figure 6, but with an added house

Case 1c extended deals with connections to multiple houses, as shown in Figure 7.

In this case, there are a variety of combinations of connections between the two twisted pairs. Table 5 on page 24 shows the calculated results for the case where one run is 50 m (I_{TWP1}), and the other run (I_{TWP2})

Element	10 m	50 m	300 m	1000 m
L_t (μH)	0.227	1.135	6.81	22.7
R_t (ohms)	0.53	2.65	15.9	53
Rg_1 (ohms)	2.52			
Rg_2 (ohms)	2.1	1.26	0.36	0.13
Zr_1 (ohms)	2.5			
Zr_2 (ohms)	2.08	1.25	0.36	0.12
Rg_1 - Rg_2 (ohms)	0.42	1.26	2.16	2.39
Vr_1 - Vr_2 (kV/kA)	0.04	0.44	1.6	2.19
I_{TWP} (A/kA)	0.076	0.164	0.103	0.0412
I_{ground} (A/kA)	0.925	0.837	0.898	0.959

Table 3: Values for the elements in Figure 6, and calculation results

Element	10 m	50 m	300 m	1000 m
Vr_1 - Vr_2 (kV)	1.2	13.2	48	65.7
I_{TWP} (kA)	2.28	4.92	3.09	1.24
I_{ground} (kA)	27.75	25.11	26.94	28.77

Table 4: Peak GPR voltages for a 30-kA lightning strike, based on Table 3

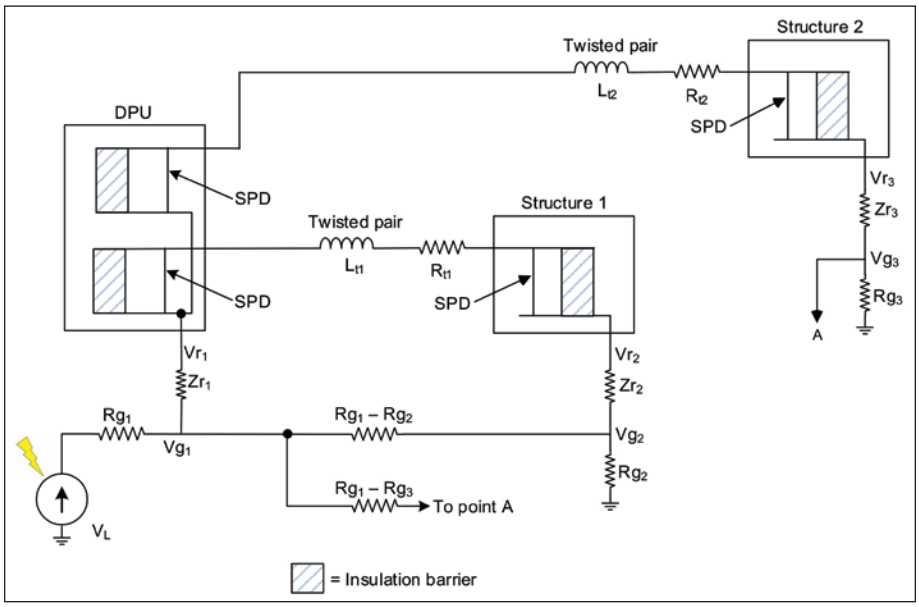

Figure 7: Connections like Figure 6, but with an added house

can be 10TB549 Table 3.5 m (yellow), 50 m (green), 300 m (blue), and 1000 m (grey). Table 6 shows the corresponding results for a median lightning strike of 30 kA (TB549 Table 3.5). The values in Table 5 and Table 6 are less than the values in Table 3 and Table 4 due to multiple current paths in parallel.

Comparing Table 6 to Table 5, the voltages and currents drop as more houses are added. The amount by which they drop depends on the relative values for the elements in the case considered.

Case 2a: There is no ground connection at the DPU and no protectors installed on the POTS lines

There is no connection to ground at the DPU in Case 2a (see Figure 8), so the GPR effect is between houses rather than between the DPU and the house. That is because the houses are potentially connected via the DPU, as shown in Figure 9. In the DPU, the insulation barrier is between twisted pairs. Again, insulation failure could be due to punch-through, or to inadequate creepages or clearances.

As shown in Figure 9, all the insulation barriers are in series, so all would have to fail to cause a GPR problem. The GPR difference between houses can be estimated from Table 2 by subtracting the GPR voltage at one location from the GPR voltage at the other. For example, the peak GPR for a house located 300 m from the DPU is 51 kV, and the peak GPR for a house located 10 m from the DPU is 10 kV, so the difference is 41 kV. If the peak GPR voltage is big enough, all the insulation barriers fail, this case becomes Case 2c.

Case 2b: Like Case 2a, except that one protector is installed on one of the two POTS lines

This case is similar to that illustrated in Figure 9, with the addition of one protector installed on the POTS line (Figure 10). The calculated results for this case are the same as those for Case 2a since

Element	10 m	50 m	300 m	1000 m
L_t (μH)	0.227	1.135	6.81	22.7
R_t (ohms)	0.53	2.65	15.9	53
Rg_1 (ohms)	2.52			
Rg_2 (ohms)	1.26	1.26	1.26	1.26
Rg_3 (ohms)	2.1	1.26	0.36	0.13
Zr_1 (ohms)	2.5			
Zr_2 (ohms)	1.26	1.26	1.26	1.26
Zr_3 (ohms)	2.08	1.25	0.36	0.12
Rg_1 - Rg_2 (ohms)	1.26	1.26	1.26	1.26
Rg_1 - Rg_3 (ohms)	0.42			
Rg_1 - Rg_3 (ohms)		1.26		
Rg_1 - Rg_3 (ohms)			2.16	
Rg_1 - Rg_3 (ohms)				1.26
Vr_1 - Vr_2 (kV/kA)	0.231	0.165	0.18	0.213
Vr_1 - Vr_3 (kV/kA)	0.002			
Vr_1 - Vr_3 (kV/kA)		0.165		
Vr_1 - Vr_3 (kV/kA)			0.197	
Vr_1 - Vr_3 (kV/kA)				0.912
I_{TWP1} (A/kA)	0.087	0.062	0.068	0.08
I_{TWP2} (A/kA)	0.028			
I_{TWP2} (A/kA)		0.062		
I_{TWP2} (A/kA)			0.044	
I_{TWP2} (A/kA)				0.017
$I_{ground1}$ (A/kA)	0.446	0.439	0.431	0.442
$I_{ground2}$ (A/kA)	0.482	0.439	0.458	0.46

Table 5: Values for the elements in Figure 7, and calculation results

	Distance, TWP_2			
Element	10 m	50 m	300 m	1000 m
Vr_1 - Vr_2 (kV)	6.93	4.95	5.4	6.39
Vr_1 - Vr_3 (kV)	0.06	4.95	5.91	27.36
I_{TWP1} (kA)	2.61	1.86	2.04	2.40
I_{TWP2} (kA)	0.84	1.86	1.32	0.51

Table 6: Peak GPR voltages for a 30-kA lightning strike, based on Table 5

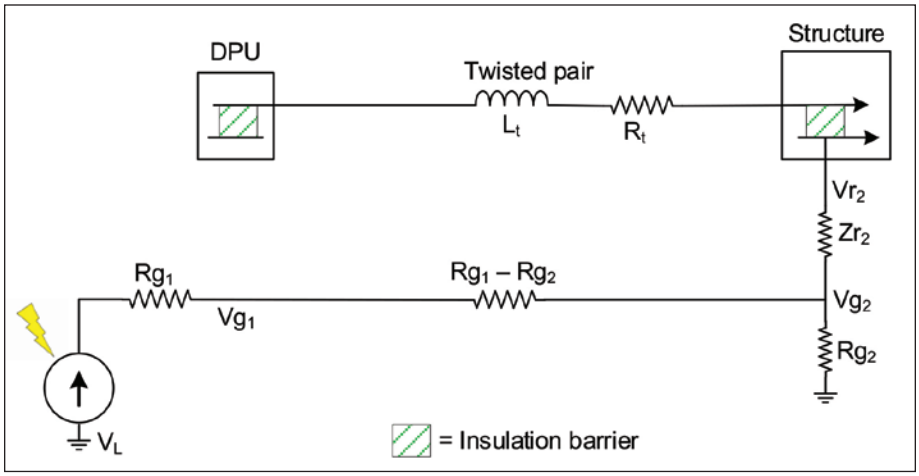

Figure 8: A single house with a ground, but no ground at DPU and no protectors

there is no GPR effect unless the insulation barriers are broken down and the SPD is activated. The GPR difference between houses can be estimated from Table 2 by subtracting the GPR voltage at one location from the GPR voltage at the other, as in Case 2a.

The difference between the two cases is that, in Case 2a, the surge voltage needs to overcome three insulation barriers, whereas in Case 2b, the surge voltage needs only to overcome two insulation barriers and the SPD activation voltage. So, the system breakdown voltage for this case is generally substantially less than for Case 2a. If the insulation barriers fail and the SPD is activated, this case becomes Case 2c.

Case 2c: Protectors are installed on the POTS lines at the house, and there is sufficient GPR to activate them

As in Case 2a, there could be a GPR difference between houses because these are potentially connected via the DPU. In Case 2c, the GPR difference between houses only needs to break down the insulation barrier between twisted pairs at the DPU. Assuming that happened and the SPDs were activated, the resulting circuit would resemble that shown in Figure 11 on page 26.

A table similar to Table 5 can be constructed for Case 2c, the main difference being that there is no ground rod #1 (or at least, no connection to it). That being the case, there are again various combinations of runs of the two twisted pairs. Table 7 on page 26 shows the calculated results for the case where one run is 50 m, and the other run can be 10 m (yellow), 50 m (green), 300 m (blue), and 1000 m (grey). Table 8 on page 26 shows the corresponding results for a median lightning strike of 30 kA (TB549 Table 3.5).

In Table 8, as the TWP_2 distance goes from 10 m to 50 m, the GPR voltage and resulting current in the twisted pair approach zero as the two locations converge on the same equipotential surface. Then, as the TWP_2 distance further increases, the GPR voltage and resulting current in the twisted pair increase as the two locations diverge from the same equipotential surface.

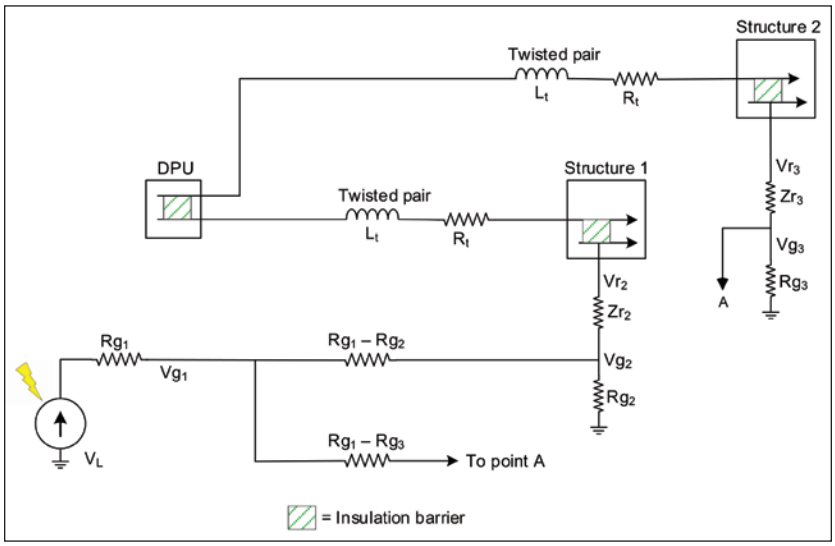

Figure 9: Case 2a where the GPR is between houses, but no SPDs

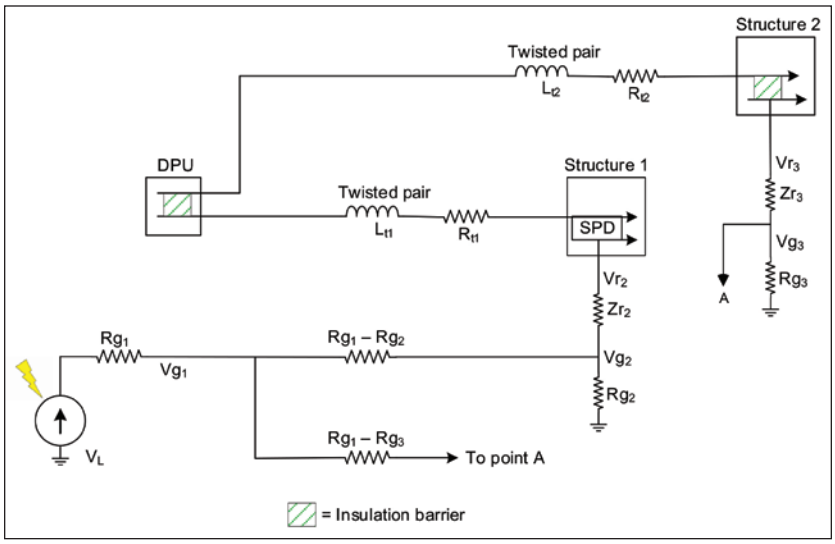

Figure 10: Case 2b where one protector is installed on one of the two the POTS lines

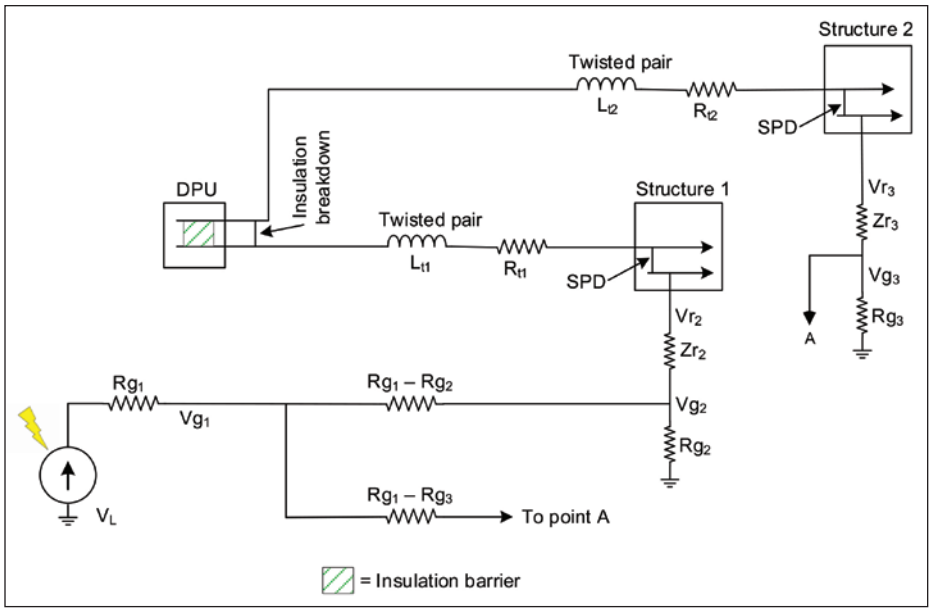

Figure 11: Like Figure 9, but with an activated protector at the house

RESULTS AND DISCUSSION

The Results of Case 1

The results for Case 1 were shown in Table 2 and Table 4.

Looking at the tables for a 30 kA 4.5/77 lightning strike, the peak GPR could be anywhere from 1.2 kV to 66 kV, depending on the assumptions made. For Case 1c where there is a connection between the DPU and the houses, there is a current flow that could potentially be destructive.

To visualize the results, the GPR voltages in Table 2 and Table 4 are plotted in Figure 12. The initial portion of the plot for Case 1c shows the effect of the ground rod.

The Results of Case 2

A GPR effect is not likely unless the insulation barriers fail or the SPDs (if present) are activated. If that happens, then we have Case 2c (Table 8).

This case looks less severe than Case 1, but the peak GPRs could be enough to cause problems.

Observations

The results of the calculations are generally consistent with those reported by Pretorius' study of large electrode systems [4]. For N connections, the breakdown voltage in some cases is the single connection case divided by N. The results were for median values of the variables and could be more or less depending on the assumptions made and the configuration of the connections.

Element	10 m	50 m	300 m	1000 m
L_t (μH)	0.227	1.135	6.81	22.7
R_t (ohms)	0.53	2.65	15.9	53
Rg_1 (ohms)	2.52			
Rg_2 (ohms)	1.26	1.26	1.26	1.26
Rg_3 (ohms)	2.1	1.26	0.36	0.13
Zr_2 (ohms)	1.26	1.26	1.26	1.26
Zr_3 (ohms)	2.08	1.25	0.36	0.12
Rg_1 - Rg_2 (ohms)	1.26	1.26	1.26	1.26
Rg_1 - Rg_3 (ohms)	0.42			
Rg_1 - Rg_3 (ohms)		1.26		
Rg_1 - Rg_3 (ohms)			2.16	
Rg_1 - Rg_3 (ohms)				1.26
Vr_2 - Vr_3 (kV/kA)	0.175	0	0.393	0.562
I_{TWP} (A/kA)	0.055	0	0.021	0.010
$I_{ground1}$ (A/kA)	0.519	0.5	0.508	0.515
$I_{ground2}$ (A/kA)	0.482	0.5	0.494	0.486

Table 7: Values for the elements in Figure 11, and calculation results

	Distance, TWP_2			
Element	10 m	50 m	300 m	1000 m
Vr_2 - Vr_3 (kV)	5.25	0	11.79	16.86
I_{TWP1} (kA)	1.65	0	0.63	0.3

Table 8: Peak GPR voltages for a 30-kA lightning strike, based on Table 7

WILL GPR CAUSE FAILURES?

Like much in surge protection, the answer is "it depends," and it depends first of all on what an acceptable failure rate is. The issue was cast this way by the NTT study of network equipment failure, where an 0.05% failure was too much to be acceptable. Considering that result, insulation failure in equipment could cause an unacceptable failure rate when individual insulation barriers withstand less than 8 kV. Failure would be expected if the sum of the individual insulation barrier voltage withstands and the activation voltage of any SPD present is less than the relevant peak GPR in Table 4 or Table 8. Things that could diminish the ability of an insulation barrier to withstand 16 kV include inadequate creepages and clearances [6].

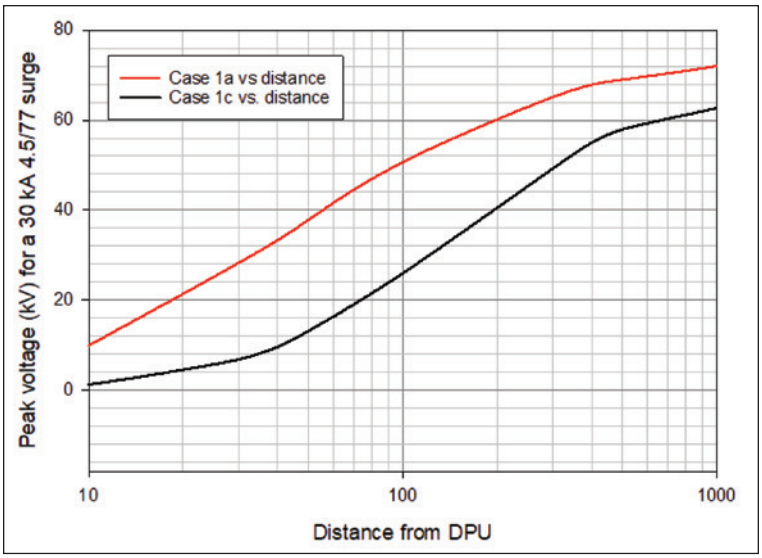

Figure 12: Comparison of the GPR voltages from Table 2 and Table 4

MITIGATION

One way to mitigate overvoltage damage is to install overvoltage protection. However, doing that might actually make the problem worse [7]. A better approach might be to increase the voltage withstand of insulation barriers where possible by installing an appropriately rated isolation transformer. This approach was done successfully by NTT [8].

SUMMARY

So where does all this lead? The calculations are just examples. Actual GPR could be more or less, depending on the distance of the lightning flash from the DPU, the distances to the houses, the presence or absence of ground connections, and the other variables. However, the calculations suggest that GPR attributable to lightning GPR could be sufficient to overcome the insulation barrier withstand voltages, which would lead to system failure. Failure could be mitigated by isolation, the way NTT did it. SPDs could also be used, but they might not solve the problem. IN

REFERENCES

1. Martin, A. R., 2011a, "A new TIA standard for equipment installations with two or more separate grounds," Alliance for Telecommunications Industry Solutions (ATIS) PEG Conference 2011, https://www.atis.org.
2. Martin, A.R., "How Grounds Affect the Peak Voltage Due to Lightning," *In Compliance Magazine*, April 2021, pp 37-40
3. Grcev, L., "Impulse Efficiency of Ground Rods," IEEE Transactions on Power Delivery, vol. 24, no. 1, January 2009, pp 441-451.
4. Pretorius, P. H., "Was Lightning Ground Potential Rise Overlooked in the Design of Large Earth Electrodes?" EE Publishers, March 26, 2018.
5. Tominaga, Tetsuya, "Damage to Equipment in Japan" ITU-T Study Group 05, Technical Session on Home Networks Geneva, 29/04/2011, https://www.itu.int/dms_pub/itu-t/oth/06/52/T06520000020001PPTE.ppt.
6. Ardley, Tim, "Protecting PoE PSE and Ethernet to the latest international OSP standards," The Alliance for Telecommunications Industries Solutions Protection Engineers Group, Monroe, LA, April 2016.
7. Wiese, Jim, "Evolving Ethernet Applications Have Resulted in Protection Challenges," The Alliance for Telecommunications Industries Solutions Protection Engineers Group, Littleton, CO, March 2014.
8. Okugawa, Yuichiro, Honma, Yasuhiro, and Takaya, Kazuhiro, "EMC Technology that Protects Network Equipment from Electromagnetic Problems," *NTT Technical Review*, March 2014, vol. 12, no. 3.

NAVIGATING THE "SAFETY HIERARCHY"

Designing Safe Products and Minimizing Risk

Kenneth Ross is a Senior Contributor to *In Compliance Magazine*, and a former partner and now Of Counsel to Bowman and Brooke LLP. Ross provides legal and practical advice to manufacturers and other product sellers in all areas of product safety, regulatory compliance, and product liability prevention, including risk assessment, design, warnings and instructions, safety management, litigation management, recalls, dealing with the CPSC, and document management. He can be reached at 952-210-2212 or at kenrossesq@gmail.com.

By Kenneth Ross

One of the key issues that must be decided by any manufacturer when designing new products or improving current products is how safe is safe enough and whether there is a reasonable alternative design that can be adopted at a reasonable cost. Unfortunately, the law and standards don't answer the question. And a risk assessment, although helpful in quantifying risk and identifying alternative designs that might improve safety, also does not answer the question.

So how does a manufacturer make a final design decision? The manufacturer should first consider all applicable safety standards that affect the product's design and whether competitors comply with or exceed those standards. The manufacturer should then engage in some type of risk assessment that identifies and quantifies risks in the contemplated design, as well as the various ways in which those risks could be reduced, such as by using a different design, guarding, warnings, instructions, training, etc.

At that point, the manufacturer must decide what design features to apply to their product, including any guarding, and when can they rely on these techniques to sufficiently reduce overall risk. This decision is most critical to the safety of the product in actual use, as well as a possible defense against potential claims that the product is unsafe.

THE SAFETY HIERARCHY

In connection with this decision, the engineering profession has accepted something generally called the safety hierarchy. The safety hierarchy is a simplistic and obvious concept that says that the manufacturer should first try to eliminate the hazard through design. Then, if it can't, it can implement the necessary safeguards to minimize the risk of such hazards or, as a last resort, provide warnings to the end-user. The hierarchy is based on the fact that guards can be removed, and warnings and instructions can be ignored. So, eliminating the hazard by design is viewed as a more effective method of providing a safe product.

This theory is also often used in litigation by plaintiff's experts to argue that the manufacturer should have made a safer design and should not have taken the less effective way out by adding a guard or by relying on warnings and instructions. In addition, some human factors experts from government safety agencies tout the safety hierarchy as the reason why manufacturers should not rely on warnings.

However, this simplistic view does not accommodate the complexities of risk and risk reduction techniques and the fact that, in most cases, multiple methods are needed to provide a safe product. In addition, the safety hierarchy provides no guidance on when guarding and warning is acceptable in lieu of design changes.

There is a consensus in the engineering literature about the existence of this hierarchy but little clear guidance about how it works in practice. Ralph Barnett, one of the early proponents of this hierarchy, said in 1985:

> "In spite of the fact that the safety hierarchy… constitutes an important tool for improving safety, it does not rise to the level of a mathematical theorem or a scientific law. This safety hierarchy was born out of consensus, not research, and its general validity can be disproved by numerous counter examples. For example, on complicated machines such as automobiles and aircraft, there are hundreds of hazards that cannot be eliminated or technically safeguarded. Even if it is possible to invoke the third priority and produce suitable warnings for these individual hazards, the sheer number of warnings destroys their effectiveness."

In many situations, manufacturers perform a risk assessment of their product during the design phase to identify potential hazards, the probability that they will occur, and the consequences or severity of the injury, damage, or loss associated with them.

THE LAW

Despite the vagueness of this concept and the lack of guidance, the law has also accepted the safety hierarchy. In the Restatement of the Law (Third): Products Liability, it says:

> "In general, when a safer design can reasonably be implemented and risks can reasonably be designed out of a product, adoption of the safer design is required over a warning that leaves a significant residuum of such risks...Warnings are not, however, a substitute for the provision of a reasonably safe design."

Of course, if a lawsuit is brought and goes to trial, it is the jury that gets to decide whether the manufacturer has been reasonable.

This statement also has some support in the case law. In *Uloth v. City Tank Corp.*, 384 N.E.2d 1188 (Mass. 1978), the court said:

> "If a slight change in design would prevent serious, perhaps fatal, injury, the designer may not avoid liability by simply warning of the possible injury. We think that in such a case the burden to prevent needless injury is best placed on the designer or manufacturer rather than on the individual user of a product. 384 N.E.2d at 1192."

Another court said that "[i]t is thus not correct that a manufacturer may … merely slap a warning onto its dangerous product and absolve itself of any obligation to do more."

Unfortunately, as these excerpts illustrate, the Restatement and case law provide no further guidance on the use of the safety hierarchy in reducing product safety risks.

RISK ASSESSMENT

In many situations, manufacturers perform a risk assessment of their product during the design phase to identify potential hazards, the probability that they will occur, and the consequences or severity of the injury, damage, or loss associated with them. Then, the manufacturer will identify the ways in which risk can be reduced and can then decide what action to take.

While the safety hierarchy encourages manufacturers to try to eliminate hazards through the design of the product before they try other approaches, the risk assessment process does not provide sufficient guidance on where to draw the line.

One of the deficiencies of the safety hierarchy is that it doesn't recognize that risk is not an "either/or" proposition. Reducing risk to an acceptable level could, for example, involve designing out the hazard and/or adding a guard and also adding a warning label such as one on a guard telling the user not to operate the machine with the guard removed. In addition, there may be instructions in the manual telling the user how to safely maintain and repair the product so that it remains safe. Rarely does a "safe design" remain safe without additional efforts to keep it that way.

It has been said about the safety hierarchy:

> "Although the safety hierarchy can provide useful guidance at an elementary level, its utility is truly limited. The safety hierarchy does not indicate when an on-product warning sign, for example, is sufficient to not use a barrier guard to safeguard a saw blade. Most engineers would agree that eliminating a hazard may be the best safety option but eliminating hazards may also result in eliminating desirable features. Therefore, a safety hierarchy sometimes provides useful guidance about

During the risk assessment process, the manufacturer must engage in what we call "risk scoring." Sometimes the scoring is quantitative and sometimes it is qualitative. The scoring systems are based on organizational culture and tolerability of risk.

> abstract design issues, but rarely proves useful for making practical engineering design decisions." [1]

Unfortunately, while the safety hierarchy wants the manufacturer to design the product to eliminate hazards, it doesn't provide criteria for deciding when the cost associated with a design change is too much or when the additional safety sufficiently destroys the product's functionality, thus allowing the manufacturer to rely on a guard and a warning or training.

During the risk assessment process, the manufacturer must engage in what we call "risk scoring." Sometimes the scoring is quantitative and sometimes it is qualitative. There is no consensus on what type of system is best to use and what is an acceptable risk when considering design vs. guarding vs. warning. The scoring systems are based on organizational culture and tolerability of risk. Risk assessment experts have said that:

> "The primary use of a risk scoring system is to help identify risks that are too high so that risk reduction efforts can focus on those areas. The risk scoring system is basically used to rank or group risks into risk levels so that decisions can be made about risk acceptability."

The result is that the manufacturer has little guidance during risk assessment and application of the safety hierarchy on which to base their final design decisions.

EXAMPLES OF THE SAFETY HIERARCHY IN ACTION

There are many real-life examples that I have encountered over the years in which manufacturers have struggled with whether warnings, if followed, were sufficient or whether they had to try to design out the hazard or add a guard. These examples illustrate that, while the safety hierarchy is a laudable goal, it is difficult to apply in practice.

"Mr. Ouch"

The first situation involved the development of "Mr. Ouch." Publicly sited transformers (the green boxes in backyards and parking lots) contain high voltage electricity. Although the electrical components are inside a locked box, there are huge risks to those who encounter hazardous electricity inside if the boxes are broken into or accidentally left unlocked.

In the 1970s, there were a number of serious accidents involving small children who were crawling into boxes that had been accidentally left unlocked. The manufacturers couldn't get rid of the risks associated with exposure to the electrical components since that is the essential function of these boxes. They couldn't design the boxes so that they couldn't be opened since that would not allow for maintenance and repair. And they couldn't include a switch that would turn off the power to the surrounding neighborhood if the door were opened.

So, in an attempt to mitigate the risk, the box manufacturers tried to make it harder to gain unauthorized access to box components and by adding a warning label intended for children and parents. The label was designed and tested to scare away children. It was also intended to warn parents that the box contained hazardous voltage and that if the box were found open, they should keep their children away and notify the power company.

To my knowledge, no child has ever been hurt from a box with this warning label. And this label has been on boxes since the early 1980s. Therefore, I would argue that it is likely that the label mostly worked. It

1. d'Entremont and Merryweather, *Integrating Product-Safety Curriculum to Enhance Design and Reinforce Engineering Ethics*, paper submitted to 2018 ASSE Annual Conference and Exposition.

either scared away the children, sufficiently educated parents so that they kept children away from the boxes, or encouraged power company personnel to be sure that boxes were closed when maintenance had been completed.

Chain Saws

The next situation shows the interplay between design and guarding. One problem with guarding is that the guards can be removed and not put back on. This usually occurs because the guard somehow limits the operator's actions when operating the product. In other cases, the guard is only necessary for certain uses and can be removed for other uses.

Back in the 1980s, I was involved in defending the adequacy of guards intended for use with chain saws. These particular chain saws, like most comparable models, used tip guards at the end of the bar to prevent the tip from hitting something hard, which would cause the saw to kick back and possibly hit the user in the face or neck.

The problem was that the user could not use the saw with the tip guard in place to make certain types of cuts. So many users would take the guard off to make the cut but fail to replace the guard before making other cuts because of the effort involved. The solutions available to saw manufacturers were to alter the chain's design to reduce the likelihood of chain saw kickback, add a safety device to stop the chain from moving if a kickback occurred, or add a warning on the product or in the manual about how to avoid kickback by not putting the tip into hard wood.

Chain saw manufacturers decided that they wanted the flexibility to minimize risk in whatever way was most appropriate. So a voluntary consensus standard was approved by the U.S. Consumer Product Safety Commission (CPSC) to accommodate different designs, as well as guarding and warning techniques to minimize the risk of kickback. This illustrates that the safety hierarchy doesn't require the manufacturer to pick one solution or another when the most effective method may be a combination of risk reduction efforts.

Gas Water Heaters

The third major situation that illustrates the difficulty of applying the safety hierarchy involves gas water heaters and their potential to explode from the ignition of flammable vapors. In order to heat water, gas water heaters require pilot lights, which traditionally have been exposed to the open air to work properly and ensure reliable operation.

However, some incidents occurred where some users were storing gasoline near the water heaters and accidentally spilling gasoline when pouring it into different containers. In such cases, vapors from the spilled gasoline would traverse the floor between the containers and the water heater and enter the area where the pilot light was located, potentially resulting in an explosion.

Some trial courts held the water heater manufacturer liable for failing to warn consumers about the pilot light (the placement of which made it difficult to see) and for failing to instruct them not to store or spill flammable liquids anywhere near the heater. As a result, the industry developed a new warning label for

There are many situations where warnings are the only feasible way to alert the consumer to the hazard because designing it out is either impossible or too costly, or where the design does not completely eliminate the hazard, and the manufacturer must also utilize guarding and warnings.

water heaters, a new warning label for gasoline cans, and an education and information program to educate consumers about these hazards and how to avoid them.

Many of the design and guarding changes that were being considered at the time would have been expensive to implement. But four years after coming out with the warning label program, the industry decided to retain the warning labels but also redesign water heaters to enclose the pilot light in a type of guard and locate it higher up on the water heater, thereby significantly reducing the risk of explosion.

The effort involving the warning label program, guarding, and design changes of gas water heaters spanned a total of 17 years and cost millions of dollars to implement. And the frustrating part is that the effort was undertaken to prevent accidents involving products that had nothing to do with water heaters.

Other Examples

Another example that illustrates the interplay of warnings and guards and design involves disposable cigarette lighters that displayed the warning "keep out of the reach of children." Despite the warning, adults were not following the precautions and children were playing with the lighters, which resulted in serious injuries and even several deaths. As a result, the industry, at the urging of the CPSC, redesigned cigarette lighters to make them harder to light. Although potentially inconvenient for adult smokers, this change would presumably prevent some accidents involving children.

In another situation involving the CPSC, lawn mower manufacturers were required to add safety guards to make it more difficult for consumers to stick their hands into whirling blades. These safety devices were extremely costly but were arguably more effective than warnings by themselves. There were also warnings added to the guards for good measure.

CONCLUSION

The previous examples show the interplay between various risk reduction techniques and the difficulty of deciding where to draw the line on any of them. Manufacturers should do the best risk assessment they can, make a design decision based on that assessment, adequately warn and instruct users regarding residual risk, and be prepared to justify their design and level of safety if challenged by a government agency or an injured party. On this last point, it is important to be able to explain why there was no reasonable alternative design at a reasonable cost that allowed the product to perform as intended and why the product is reasonably safe when a consumer follows the safety precautions provided with the product.

Manufacturers need to undertake some type of risk assessment to justify the final design decisions they make. Unfortunately, this process can differ for each manufacturer. This, combined with the fact that there is little guidance as to which element of the safety hierarchy should be utilized in any given situation, can make this a difficult process.

There are many situations where warnings are the only feasible way to alert the consumer to the hazard because designing it out is either impossible or too costly, or where the design does not completely eliminate the hazard, and the manufacturer must also utilize guarding and warnings.

Manufacturers need to carefully document the process that they used to quantify these alternative actions and the basis of their decision to move down the safety hierarchy. Doing so will help minimize the risk that a jury or a plaintiff's expert will believe that they took the easy way out instead of trying to prevent the risk through design.

A RECIPE FOR SUCCESS: HOW TO GROW FROM EMC NOVICE TO EMC EXPERT

Some tips from an industry veteran to help you navigate the world of EMC

Daryl Gerke, PE, has been a successful consulting engineer for more than 40 years. In 1978, Daryl and his business partner (the late Bill Kimmel, PE) co-founded Kimmel Gerke Associates as an electrical engineering consulting firm. During their time together, they solved or prevented hundreds of EMI/EMC problems across a range of industries. They wrote three books and over 200 articles on EMI/EMC-related issues and trained more 12,000 students on EMI/EMC design and troubleshooting through their seminars. Gerke is a Registered Professional Engineer (PE), and a NARTE Certified EMC Engineer (NCEE) and can be reached at dgerke@emiguru.com.

By Daryl Gerke, PE

Editor's Note—Originally published in our March 2014 issue, this article remains one of the most popular articles among readers of In Compliance *Magazine. The most recent version of this article was published in our January 2020 issue.*

It's been said that nobody grows up wanting to be an EMC engineer. Rather, it usually just happens. Maybe you had incriminating information on your resume, such as being a radio ham. "You've created interference, so you must know how to stop it, right?" Maybe you showed a knack for EMC troubleshooting, and suddenly you're now the company expert – whether you want to be or not. Or maybe you just zigged when you should have zagged.

In any event, you're now in the EMC trenches. In this article, we'll discuss what to do next. It won't happen overnight, but with a plan (and some work), you can move from EMC-novice to EMC-expert.

FIRST, FIND A MENTOR…

If you are in a big company with an established EMC group, this may be your boss or a colleague. You need someone who has experience and who is willing and able to share it. Fortunately, most EMC engineers are happy to help – particularly the older ones, so don't be afraid to approach the more senior members of your engineering staff.

If you are in a smaller company, identifying a mentor may be more difficult, particularly if you are the sole EMC practitioner. In this case, you may need to look outside the company. Good candidates for mentors are your local EMC test lab, or perhaps an EMC consultant. Since both sell their time, fees may or may not be involved, but your company should be willing to invest in your education. After all, they put you in this position, and they want you to do well.

GET SOME EXPERIENCE – FAST…

If you are responsible for the front-end design work, get to know the design teams. Participate in design reviews even if you don't feel you know a lot about EMC. Trust me, this is a quick way to accelerate learning, particularly if you are a young engineer.

Be curious and ask questions. Don't worry that you don't know the answers – you are in learning mode. And don't limit yourself to EMC engineers. Designers in specialized areas like power electronics, RF or analog circuits often have valuable insights applicable to EMC issues.

Witness EMC tests. If you are hired into an EMC lab, you'll be doing this anyway under the supervision of an experienced EMC test engineer. If you're doing design work, get in as much test time as you reasonably can. It is amazing how much you can learn by just watching an EMC test. An added advantage – you'll also get to know the good folks at the test lab.

START ON YOUR SELF-EDUCATION…

Unfortunately, undergraduate engineering classes on EMC are few and far between. Graduate programs are even more rare, and those that do exist usually focus on specific research. As a result, you may need to set up your own self-training program. Here are some ideas.

Books

While I have over a hundred EMC books on my bookshelf, there are four I regularly recommend for newcomers to EMC.

- *EDN Magazine Designer's Guide to EMC* – written by my late business partner Bill Kimmel and me as a beginner's guide for non-EMC engineers. Simple explanations and recommendations, with no equations or complex math. A good place to start if

you are new to EMC. Available in PDF and hard copy. Published by Kimmel Gerke Associates.

- *Electromagnetic Compatibility Engineering* – written by Henry Ott as a major update to his previous book (Noise Reduction Techniques in Electronics Systems). Well written, with all the equations you need without field theory or complex calculus. Published by Wiley & Sons.
- *Introduction to Electromagnetic Compatibility, 2nd Edition* – written by Clayton Paul, primarily as a college text, so it has lots of technical depth with all the field theory details. At the same time, very readable and practical. Published by Wiley Interscience.
- *High Speed Digital Design – A Handbook of Black Magic* – written by Howard Johnson as the definitive guide on Signal Integrity. Easy to read, with all the great design advice applies to EMC too. Published by Prentice Hall.

Magazines

There are several publications serving the EMC community. The good news is that two are free, and all are filled with practical articles.

- *In Compliance* (you are reading it now) – monthly, with an annual buyers guide. Design, test and regulatory issues. Focus on commercial electronics, blanketing compliance related topics. Free on-line, free hard copy in North America. Same Page Publishing Co.
- *Interference Technology* (formerly ITEM) – annual buyers guide with additional guides throughout the year. Primarily test and regulatory issues, with an emphasis on EMC. Free. ITEM Publications.
- *IEEE Electromagnetic Compatibility Magazine* - Quarterly publication of the IEEE EMC Society. Included with membership the EMC Society.

Courses

These are excellent ways to gain focused practical information in a short time. They typically run from 2-5 days in duration and are offered throughout the US. In house classes are another option. Here are three major providers of EMC training.

- Kimmel Gerke Associates Ltd – EMC Design classes now offered primarily in-house, with schedule by mutual agreement. Over 12,000 past students.
- Wyatt Technical Services LLC - EMC Design classes offered both in-house and public. Part of an annual EMC Week in Las Vegas, NV.
- Washington Labs Academy – various EMC issues (length varies), with an emphasis on test and regulatory topics. Classes on-line and throughout the year at Washington Labs in Maryland.

Regulations

Last, but not least, you want to get copies of the EMC regulations applicable to your industry.

Most are copyrighted and have a fee, but government regulations such as MIL-STD-461 and MIL-STD-464 are in the public domain and are free. The latter also have detailed appendices that are great tutorials on the "why" along with the "how" of the various tests.

Here are the main EMC requirement by industry (with web sites.) Many of these are tailored by individual companies as internal EMC requirements.

- Military – MIL-STD-461 & MIL-STD-464 (http://quicksearch.dla.mil)
- Avionics – RTCA DO-160 (http://www.rtca.org)
- Automotive – SAE J551 & SAE J1113 (http://www.sae.org)
- Commercial/Industrial – FCC Part 15, EN55022/55011, EN61000-4-x (http://www.fcc.gov, http://www.ansi.org)
- Telecommunications – Telcordia (now owned by Ericsson) GR-1089 (http://telecom-info.njdepot.ericsson.net)
- Medical – EN60601-1-2, FDA "Reviewer Guidance" (http://www.ansi.org, http://www.fda.gov)

PARTICIPATE IN THE EMC COMMUNITY…

The community is small but tight. Don't worry – fresh recruits are always welcome. Maybe it is a case of "misery likes company", but you will find most EMC folks are friendly to newcomers.

This is especially true of many EMC old-timers. Most of us have enjoyed the journey and are happy to share what we have learned. Since little of this is taught in schools, most of us learned (and continue to learn) directly from colleagues and those before us. So if you are a new EMC engineer, don't hesitate to ask for help.

The IEEE EMC Society is probably the biggest community resource. Among the smallest of the IEEE professional societies, the EMC Society is very active. It hosts chapters throughout the world, along with annual symposiums. Both provide excellent opportunities for ongoing education and professional networking.

If you have graduated within the last 15 years, check out the IEEE EMC Young Professionals, which has their own IEEE affinity group. (If you are an old coot like me, just hang out at the bar at the next EMC symposium — you will be in good company.)

Join an EMC Chapter

My first recommendation is to join your local IEEE EMC chapter. Go to http://www.emcs.org for a list of chapters, many with links to their local pages. Most chapters host at least four meetings a year, and usually include a speaker discussing a technical topic. Finally, you don't need to be an IEEE member to attend – if you are interested in EMC, you are always welcome.

If you don't have a local chapter, consider forming your own. Upon moving to Phoenix 22 years ago, I missed the camaraderie of the Minnesota chapter. So two other EMC engineers and I reactivated the local chapter, which had been defunct for years. It is still active 22 years later.

And, you are not alone. The EMC Society will help with its Angel and Distinguished Lecturer programs.

Attend EMC Symposiums

My next recommendation is to attend an IEEE EMC Symposium. These are held annually around the US, with additional international symposiums around the world.

A word of caution – you may need to convince your management of the value of attending. Trade shows are often seen as a boondoggle, but this can be an excellent educational opportunity.

Even after almost 50 years in this business, I learn something new from every show.

Here are some suggestions for attending the symposium:

- Attend all five days. While the main technical sessions are Tuesday through Thursday, tutorial sessions are held on Monday and Friday. These tutorials sessions are often aimed at the new EMC engineer, but I find them useful too.
- The Tuesday through Thursday technical sessions are usually heavy on analysis and modeling, so make these a lower priority. Now this may irk the academics, but you can always read the papers later. If a particular paper interests you, by all means attend. Sometimes there are special sessions, and we've found those to be very useful. The point is – don't spend all your time in the meeting rooms.
- Spend time on the show floor. Talk with the vendors to find out about new products, and attend the special tutorial demos. Both can be particularly beneficial to the new EMC engineer.
- Attend the social events. Remember, "All work and no play…" Besides, this is a chance to rub shoulders with those in the business. Although many engineers are introverts, try to mingle, meet and ask questions. Most of those you meet will be fellow engineers.

Use LinkedIn

Finally, use your on-line resources. At this time, LinkedIn is the preferred venue for professional activities. There are several EMC special interest groups which you can join. Your participation can be as much or as little as you prefer. These are also great places to post those perplexing EMC questions.

MAKE A PLAN, AND THEN WORK IT…

First, be patient. It may take a couple of years until you feel like you have really mastered the craft. If you are new, there is a lot to learn. Often this learning is piecemeal, like working a puzzle. But if you study, learn and participate, one day in the not too distant future the overall picture will make sense.

At that point, you'll realize you are finally there – you're no longer an EMC novice, but have become an EMC expert.

A final piece of advice. When you reach that point, don't stop learning. Even after almost 50 years, I still learn new things about EMC. It keeps the game interesting. What weird problem will crop up next? Welcome to the wild and wacky world of EMC!

EVALUATION OF EMC EMISSIONS AND GROUND TECHNIQUES ON 1- AND 2-LAYER PCBs WITH POWER CONVERTERS

Part 8: AC/DC Converter – Baseline EMC Emissions Evaluation

By Bogdan Adamczyk, Scott Mee, and Nick Koeller

This is the eighth article in a series of articles devoted to the design, test, and EMC emissions evaluation of 1- and 2-layer PCBs that contain AC/DC and/or DC/DC converters and employ different ground techniques [1-7].

In this article, we evaluate the performance of the baseline AC/DC converter. The baseline AC/DC converter has only the components needed for functionality and does not have any specific EMC components populated. [7] This configuration will give us a view into what the conducted and radiated emissions issues will be prior to adding components and the cost to specifically address EMC issues. We present the test results from the baseline radiated and conducted emissions tests performed according to the CFR Title 47, Part 15, Subpart B, Class B.

1. INTRODUCTION

Figure 1 shows the functional blocks of the PCB assembly [1].

The baseline schematic for the AC/DC converter is shown in Figure 2.

The top layer of the PCB used to create the AC/DC converter is shown in Figure 3, while the bottom layer is shown in Figure 4.

Figure 5 shows the baseline AC/DC PCB converter populated with the baseline components.

This article is organized as follows. Section 2 presents the baseline radiated emissions test results. In Section 3, the baseline conducted emissions results are shown. Section 4 addresses the content of the next article.

Dr. Bogdan Adamczyk is professor and director of the EMC Center at Grand Valley State University (http://www.gvsu.edu/emccenter) where he regularly teaches EMC certificate courses for industry. He is an iNARTE certified EMC Master Design Engineer. Prof. Adamczyk is the author of the textbook "Foundations of Electromagnetic Compatibility with Practical Applications" (Wiley, 2017) and the upcoming textbook "Principles of Electromagnetic Compatibility with Laboratory Exercises" (Wiley 2022). He can be reached at adamczyb@gvsu.edu.

Scott Mee is a co-founder and owner at E3 Compliance which specializes in EMC & SIPI design, simulation, pre-compliance testing and diagnostics. He has published and presented numerous articles and papers on EMC. He is an iNARTE certified EMC Engineer and Master EMC Design Engineer. Scott participates in the industrial collaboration with GVSU at the EMC Center. He can be reached at scott@e3compliance.com.

Nick Koeller is an EMC Engineer at E3 Compliance which specializes in EMC & SIPI design, simulation, pre-compliance testing and diagnostics. He received his B.S.E in Electrical Engineering from Grand Valley State University and is currently pursuing his M.S.E in Electrical and Computer Engineering at GVSU. Nick participates in the industrial collaboration with GVSU at the EMC Center. He can be reached at nick@e3compliance.com.

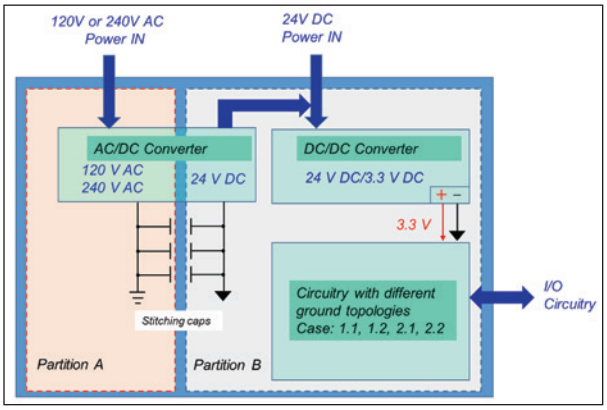

Figure 1: Top-level schematic – functional blocks

2. RADIATED EMISSIONS TEST RESULTS

The AC/DC converter was tested according to CFR Title 47, Part 15, Subpart B, Class B.

A legend for the radiated emissions plot is shown in Figure 6.

Radiated emissions measurements were made using a biconical antenna from 30 MHz - 300 MHz and a log-periodic antenna from 300 MHz - 1 GHz.

The measurements were taken with the DUT at four different positions (angles) with each side of the PCB facing the antenna. We only present the results for the zero-degree angle (AC inlet facing the antenna) as this angle resulted in the highest emissions. Figure 7 shows the results from 30 MHz - 1 GHz.

As shown in Figure 7, there are numerous failures in the biconical range (30 MHz - 300 MHz). These will be investigated in the next article.

The failing emissions are considered broadband noise and come primarily from the switching circuitry and magnetics. At these frequencies,

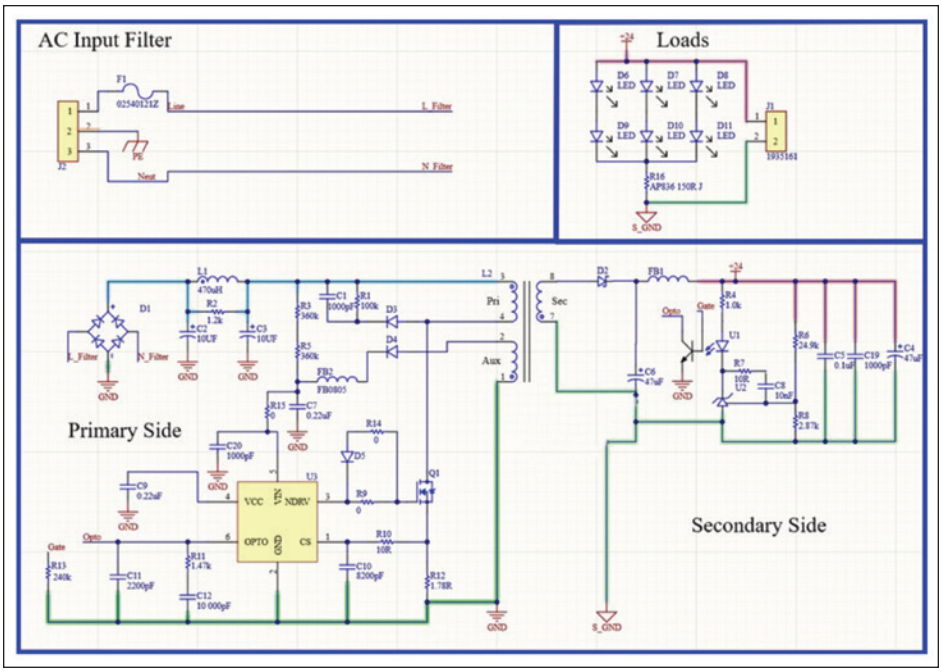

Figure 2: AC/DC converter baseline schematic (EMC components removed)

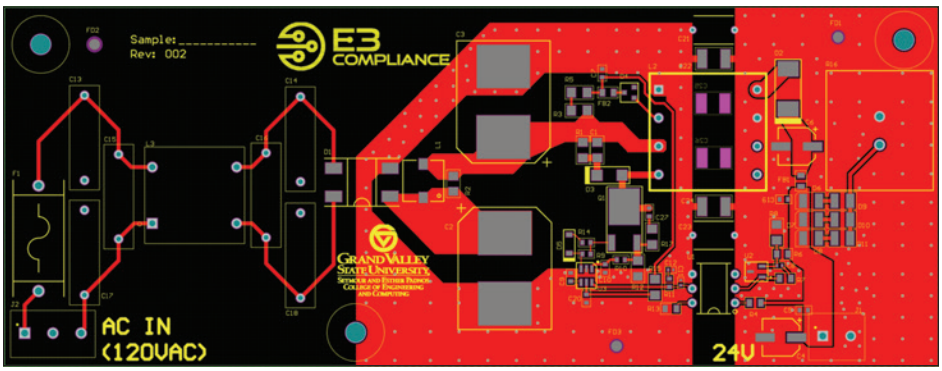

Figure 3: Top layer of the PCB

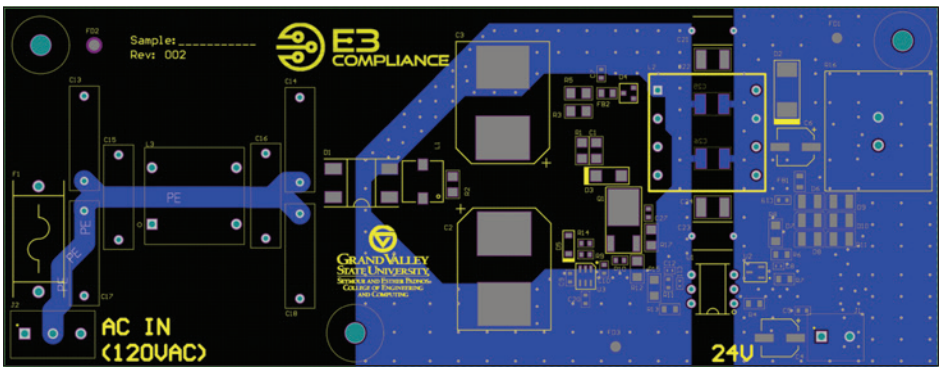

Figure 4: Bottom layer of the PCB

the harness length is the most likely *antenna* where common mode emissions conduct and re-radiate effectively. Reducing these emissions will most likely involve filtering, using snubber circuits, and tuning stitching capacitance between the SGND and GND.

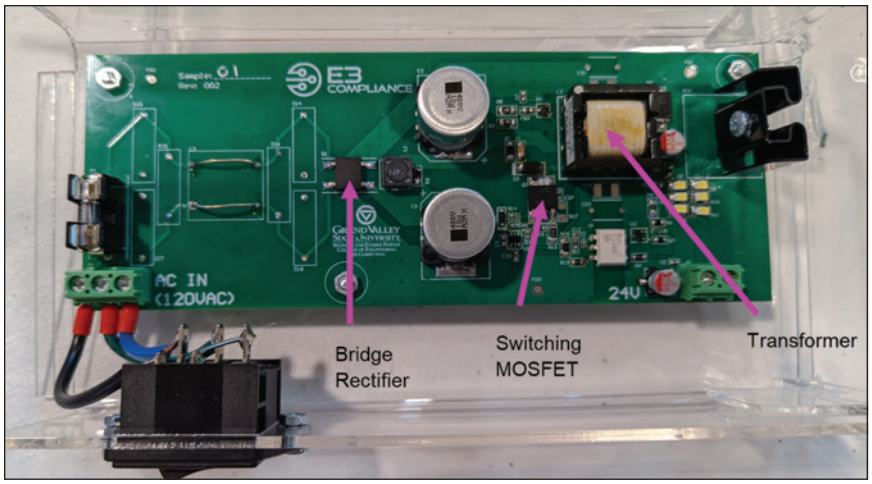

Figure 5: Baseline AC/DC converter PCB with components

3. CONDUCTED EMISSIONS TEST RESULTS

A legend for the conducted emissions plots is shown in Figure 8.

The test results on both the line and neutral, in the frequency range of 150 kHz – 30 MHz, are shown in Figure 9.

The conducted emissions results show multiple failures up to the frequency of 20 MHz. The failures are comprised of the fundamental switching frequency (~ 270 kHz) and the subsequent harmonics. Reducing these emissions will most likely involve front-end filtering components such as a common mode choke, Y-capacitors, and X-capacitors. These will be investigated in the next article.

4. FUTURE WORK

The next article will be devoted to the evaluation of EMC countermeasures to address the radiated and conducted emissions non-conformities. The article will address each test result and the impact of the optional EMC components.

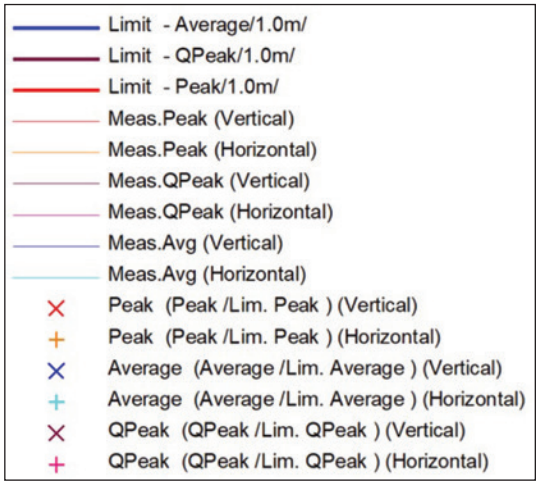

Figure 6: Radiated emissions legend

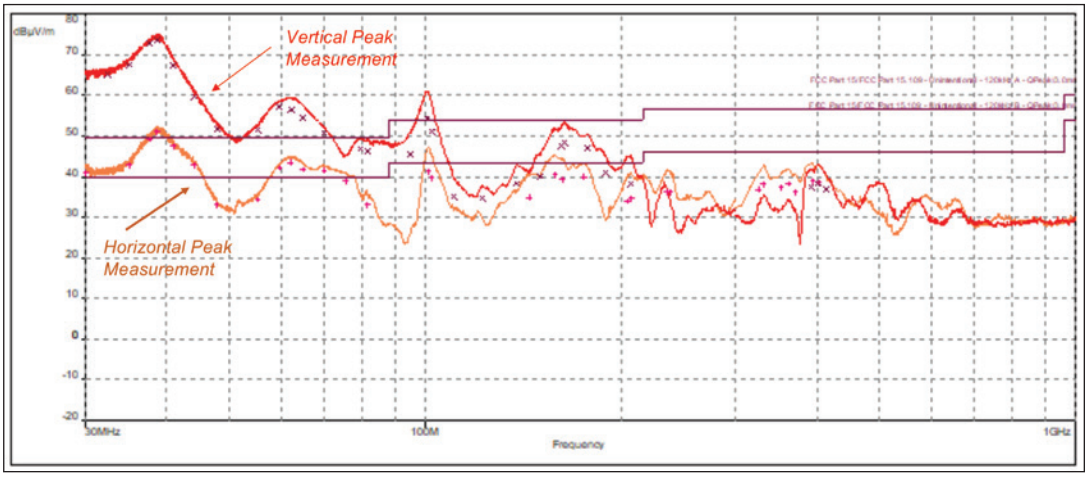

Figure 7: Radiated emissions results in the frequency range 30 MHz - 1 GHz

REFERENCES

1. Adamczyk, B., Mee, S., Koeller, N, "Evaluation of EMC Emissions and Ground Techniques on 1- and 2-layer PCBs with Power Converters – Part 1: Top-Level Description of the Design Problem," *In Compliance Magazine*, May 2021.
2. Adamczyk, B., Mee, S., Koeller, N, "Evaluation of EMC Emissions and Ground Techniques on 1- and 2-layer PCBs with Power Converters – Part 2: DC/DC Converter Design with EMC Considerations," *In Compliance Magazine*, June 2021.
3. Adamczyk, B., Mee, S., Koeller, N, "Evaluation of EMC Emissions and Ground Techniques on 1- and 2-layer PCBs with Power Converters – Part 3: DC/DC Converter – Baseline EMC Emissions Evaluations," *In Compliance Magazine*, July 2021.
4. Adamczyk, B., Mee, S., Koeller, N, "Evaluation of EMC Emissions and Ground Techniques on 1- and 2-layer PCBs with Power Converters – Part 4: DC/DC Converter – EMC Countermeasures-Radiated Emissions Results," *In Compliance Magazine*, August 2021.
5. Adamczyk, B., Mee, S., Koeller, N, Evaluation of EMC Emissions and Ground Techniques on 1- and 2-layer PCBs with Power Converters – Part 5: DC/DC Converter – EMC Countermeasures - Conducted Emissions Results," *In Compliance Magazine*, October 2021.
6. Adamczyk, B., Mee, S., Koeller, N, "Evaluation of EMC Emissions and Ground Techniques on 1- and 2-layer PCBs with Power Converters – Part 6: PCB Layout Considerations," *In Compliance Magazine*, November 2021.
7. Adamczyk, B., Mee, S., Koeller, N, "Evaluation of EMC Emissions and Ground Techniques on 1- and 2-layer PCBs with Power Converters – Part 7: AC/DC Converter Design with EMC Considerations," *In Compliance Magazine*, December 2021.

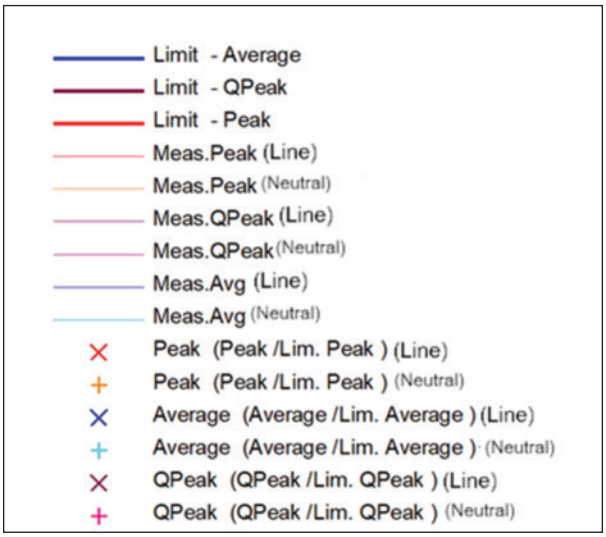

Figure 8: Conducted emission results legend

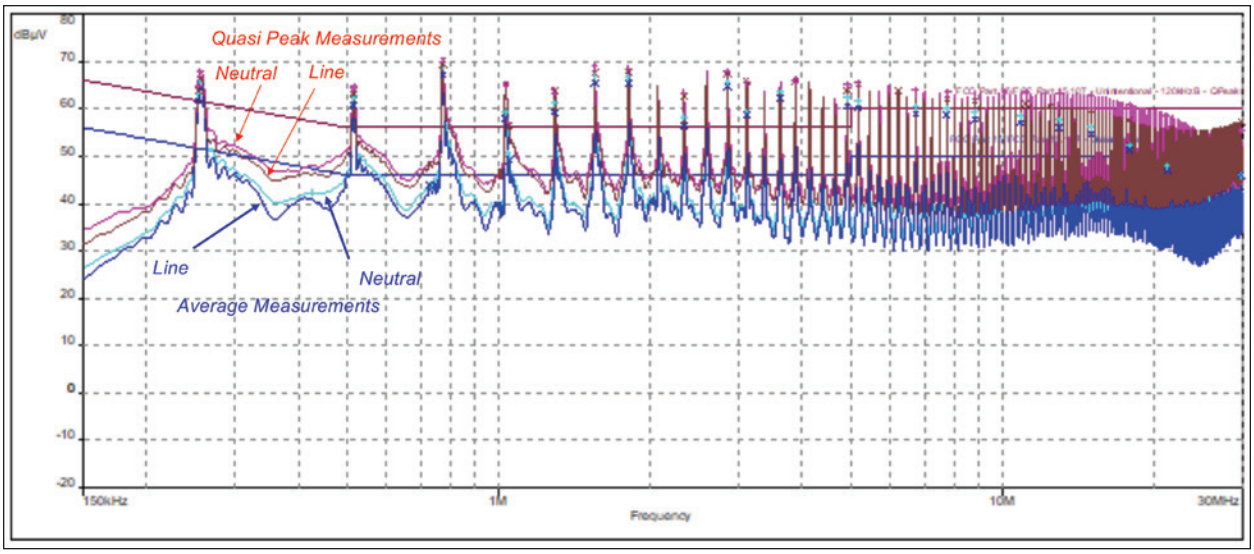

Figure 9: Conducted emission test results 150 kHz - 30 MHz

WHAT ARE EXTERNAL LATCH-UP AND INTERNAL LATCH-UP?

By Wei Liang, Robert Gauthier Jr., and Souvick Mitra for EOS/ESD Association, Inc.

WHAT IS A LATCH-UP EVENT?

As one of the major reliability concerns for the semiconductor industry, a latch-up event in bulk complementary metal-oxide-semiconductor (CMOS) technology originates from the base-collector coupled parasitic negative, positive, negative (NPN) (also known as sinking) and positive, negative, positive (PNP) (also known as sourcing) bipolar transistors. The placement of the N-type and P-type devices in close proximity will result in the parasitic silicon-controlled rectifier (SCR) structure. Figure 1 and Figure 2 show the parasitic SCR structure in a CMOS inverter and the simplified parasitic SCR structure. When a latch-up event is triggered, a low resistance path forms between supply and ground, and a significant amount of current can flow through this parasitic path. This could, in most cases, lead to substantial chip damage when it is a sustained latch-up event that is being triggered. Holding voltage (V_h) is the minimum voltage required to keep the SCR structure at the on-state. A sustained latch-up event happens when the supply voltage (V_{DD}) is higher than the V_h of the parasitic SCR structure because the V_{DD} is high enough to keep the SCR turned on and won't unlatch once it is triggered.

WHAT ARE INTERNAL LATCH-UP AND EXTERNAL LATCH-UP?

There are two main categories of latch-up, internal latch-up (ILU) and external latch-up (ELU). For the ILU event trigger, a few factors include the internal circuit creating supply bounce, on-chip transmission line reflections, or the on-chip generation of carriers. Those on-chip signals could trigger the parasitic SCRs formed in the bulk CMOS technology. However, for ELU, the parasitic SCRs are usually triggered by the off-chip signals received by the I/O signal pad. Those off-chip signals can create a large voltage bounce or carrier injection, triggering a latch-up event within an I/O block or in the weakest internal circuit adjacent to I/O cells. Figure 3 shows the negative mode of the ELU current injection from the I/O pad. The carrier injection flow paths are shown in the illustration.

Wei Liang joined the GlobalFoundries ESD/latch-up team in 2017 and has worked on latch-up mitigation and ESD protection development for advanced node technologies since then. Wei has authored or co-authored 16 peer-reviewed papers and holds three U.S. patents in the ESD area.

Robert Gauthier Jr. has led the worldwide ESD/latchup team within GlobalFoundries including colleagues in the U.S., Dresden, and Singapore. He has over 285 issued patents with many others filed. He was one of the founders of the International ESD Workshop (IEW) and is a former General Chair of the EOS/ESD Symposium.

Souvick Mitra is a Senior Manager-Deputy Director in GlobalFoundries, managing a global team of ESD/latch-up engineers. He has been session chair of the technical program committee for the EOS/ESD Symposium. He has authored or co-authored more than 50 publications in journals and conferences and has been granted over 75 patents

HOW DOES TECHNOLOGY SCALING IMPACT LATCH-UP?

As bulk technologies have scaled down to 5nm node based on the low-power requirement of the application, the V_{DD} of the core circuit has been reduced to below 1.0 V. In applications with V_{DD} < 1.0V, as V_h of the parasitic SCR structure is usually higher than V_{DD}, there is no sustained latch-up and there are minimal ILU or ELU risks in this condition. However, the core circuit could work under overdrive mode, or the I/O circuit works under normal operating voltage where V_{DD} > 1.0V occurs. In this condition, sustained latch-up could be a concern when V_h falls below the $V_{DD,}$ and proper ILU and ELU prevention guidelines should be considered.

HOW DO FOUNDRY AND IC DESIGNERS ADDRESS THE INTERNAL AND EXTERNAL LATCH-UP RISKS?

Since the latch-up event is a major reliability concern, the latch-up mitigation development becomes one of the most important tasks for the foundries to provide the IC designers with options to mitigate the latch-up risks in their design. The latch-up mitigation solutions are usually defined as a set of ILU and ELU ground rules in the technology process design kit (PDK) for the IC designers.

For ILU mitigation solutions, designers could either move the N-type device and P-type devices apart, increasing the anode to cathode spacing of the parasitic SCR structure, or add more well taps to reduce well tap spacing, reducing the parasitic well resistance, because larger well resistance could promote latch-up triggering.

To reduce the ELU risk, designers also have a few other options. Designers can either increase the distance between the injector and the victim device or increase the width of the guard ring which surrounds the injecting I/O cell. The wider the guard ring is, the more carriers will be contained within the I/O cell. Designers can also add a guard ring around the core circuit to reduce the amount of carrier reaching out to the victim device or reduce the well tape spacing in the core circuit to create a harder latch-up triggering condition. The overall design strategy to eliminate the ELU risk is a trade-off scenario for designers, and the solution should be customized based on the chip scheme.

Overall, latch-up prevention is one of the most important tasks for both foundries and IC designers. Based on the chip design scheme, designers should select proper solutions to eliminate the ILU and ELU risks in chip design, referencing the foundry guidelines and latch-up silicon data to ensure minimal latch-up risks for the product.

REFERENCE

1. W. Liang, R. Gauthier, S. Mitra and H. Lai, "*External latch-up Risks and Prevention Solutions in Advanced Bulk FinFET Technology*," 2019 41st Annual EOS/ESD Symposium (EOS/ESD), 2019, pp. 1-9, doi: 10.23919/EOS/ESD.2019.8869999.

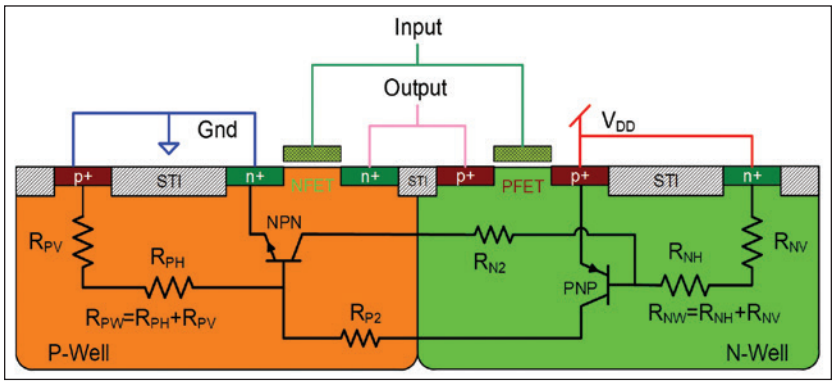

Figure 1: Parasitic SCR in a CMOS inverter

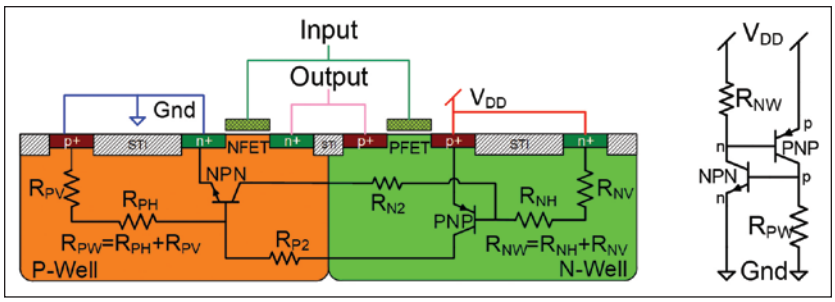

Figure 2: Cross-section and schematic of parasitic SCR structure

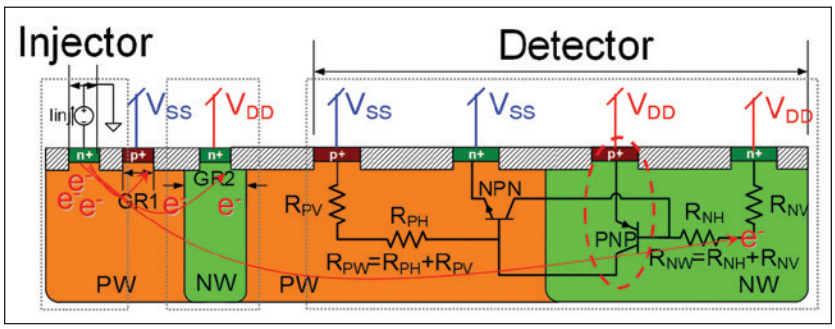

Figure 3: Negative mode ELU current injection.

PRODUCT SAFETY AND LIABILITY: A HISTORICAL OVERVIEW

By Erin Earley

A Look at How the Past Has Shaped Today's Approaches

In our last *On Your Mark* column, we explored key components of a comprehensive product safety strategy – from risk assessment to safety labels and manuals – and ways those elements work together to improve safety and reduce risk. How did we get here – why are certain perceptions and directives in place – and how do they differ across the globe? History is very telling in influencing the trajectories of product safety and liability. To get the details, we turned to insight from Doug Nix, Managing Director of Compliance inSight Consulting and lead author of the Machinery Safety 101 blog, with over 30 years of industrial safety experience specializing in machinery safety and risk assessment methods. Read our interview with Nix for context on how the past has shaped the ideology and approaches that we employ today.

Erin Earley, head of communications at Clarion Safety Systems, shares her company's passion for safer products and workplaces. She's written extensively about best practices for product safety labels and facility safety signs. Clarion is a member of the ANSI Z535 Committee for Safety Signs and Colors, the U.S. ANSI TAG to ISO/TC 145, and the U.S. ANSI TAG to ISO 45001. Erin can be reached at eearley@clarionsafety.com.

Give us a brief historical overview of product safety and liability.

In the early part of the Industrial Revolution, there really was no product safety. The basic workplace safety premise was that workers had the right to negotiate their contracts of employment with their employer to get a fair deal. That ended up giving employers all the power and workers none. From the workplace safety perspective, generally speaking, the attitude was that if a worker was injured using a piece of equipment, they were lazy or incompetent; the equipment wasn't blamed. In historical photos of machines in the workplace at the end of the 19th century and the beginning of the 20th century, you'll see open flywheels and other issues recognized today as obviously dangerous. But, that wasn't the prevailing thinking at that time.

During this same time period came the rise of electrical technology. The World's Fair: Columbian Exposition, also known as the Chicago World's Fair, held in 1893, was an important historical event for safety. The fair's insurers, worried about the likelihood of fire, hired William Henry Merrill to form a team and to do an engineering evaluation of the safety of the electrical equipment that was being installed. That spun off into Underwriters Laboratories, or UL, and the first technical standards that were written for electrical product safety.

Once standards for electrical equipment came about, the need for additional standards for other types of products with prevalent dangers, like steam power, followed. UL and the focus on electrical safety was really the beginning of that safety and certification process.

How did those early trajectories create differences in safety and liability – the perception, approaches, and directives – in the U.S. and Canada?

In the U.S. and Canada, there's a reliance on tort law as the basis for product liability. Manufacturers have an obligation to provide safe products and to warn people about any hazards related to the product. Those requirements have risen up out of the original product safety/liability cases, some of which happened in the same timeframe as the Chicago World's Fair, the middle to late 19th century, with many more to follow.

The assumption in U.S. liability law, and also typically if a case is brought in Canada, is that the manufacturer

of the product is guilty and has to prove that they did everything necessary to provide a safe product. That includes warnings, user instructions, and other elements. Today, that continues to be the basic concept in product liability, that the burden lies on the manufacturer to prove that they did everything possible to make their product safe.

In Canada, there's a basic test for causation called the *but for* test that requires the plaintiff to show that the injury would not have occurred but for some negligence on the part of the manufacturer; it's up to the court to decide whether that statement is true and whether the manufacturer did everything that was necessary. Normally, there's never a zero-liability situation for the manufacturer in either Canadian or U.S. law. It's rare for a manufacturer to get off completely scot-free. Some portion of liability is always given to them – it comes down to being a question of how large.

Was it a similar trajectory in Europe?

The trajectory in Europe took a very different path than in North America and was much more modern, coming about largely in the 1970s and 1980s. In 1975, the Council of the European Communities (now the European Union) adopted a resolution for a preliminary program on consumer protection and information technology. After a decade of deliberation and debate, the Product Liability Directive was adopted in 1985. Essentially, it states that the manufacturer is only permitted to sell products that are safe and that the products have to provide a level of safety that a person is entitled to expect. That level of safety that a person is entitled to expect is set by the individual product and by safety directives, hence the importance of meeting those requirements. The assumption in European courts is that the manufacturer is selling safe products and that they have done everything necessary to provide a safe product to the customer. The obligation, therefore, is on the consumer to prove that there's a cause and effect relationship between the injury that they sustained and a defect in the product, which is a much harder mark for a plaintiff to meet than the other way around, as it's done in North America.

Europe sees North America's approach as a sort of *Wild West* of product safety. From the European point of view, they have a very structured process that comes from the manufacturer or through providing safe products to the end-user; by the time products get into the workplace, in theory, they're already safe.

In Europe, many different types of safety directives must be met depending on the product – the Machinery Directive, Low Voltage Directive, Toy Safety Directive, and many others. Therefore, no matter what the product is, there's generally considered to be some level of conformity assessment that has to be done. In North America, there's no similar requirement or structure that's placed on a manufacturer of machinery; you can build any kind of machinery you like and put it on the market. Fundamentally, if it passes an electrical inspection and can get a label on it, there was really no reason

At the end of the day, it comes down to what local laws require, what the social environment is, and how the product is being used – in the workplace or at home, with children or with the elderly, etc.

why it couldn't be placed in use. Consumer products have stricter provisions for safety in many cases. The U.S. Consumer Product Safety Commission and Health Canada's Consumer Safety Directorate oversee consumer product safety, including risk assessment.

The obligation for safety on that equipment – and the real takeaway here – is that as individual people – both at home and in our workplaces – we've become comfortable with the idea that the products that we buy and use are safe. When it comes to our workplaces, however, unless the employer has taken the time to actually have machinery or equipment evaluated and verified that it actually meets the safety requirements, either in the OSHA standards themselves or in ANSI standards that might be applicable to the product, there's nothing that says that product is safe. A lot of workers get hurt because they're working under the assumption that the product they're using is already safe. They may not be aware of all the hazards that are present.

The U.S. OSHA laws and the Canadian workplace safety laws place the responsibility on the employer to ensure that equipment used in the workplace is safe and suitable for its application. It's a reactive system, meaning that it's typically not going to be checked unless somebody has been hurt, even though the employer should, in theory, be doing something proactively. But the reality is, many small and medium-sized enterprises don't have the staff or in-house resources with product safety experience or knowledge to prioritize this. In larger organizations where they typically have an OH&S department, they're typically more focused on dealing with issues with people that have already been hurt, as opposed to trying to dig out the issues that might exist.

Can you tell us more about the tie-ins with risk assessment, especially in terms of its history and current requirements?

Risk assessment started to become a concept in engineering circles after World War II. That time period saw the rise of the aviation and nuclear power industries. In the nuclear sector, there was a clear understanding of the hazards related to nuclear power and reactors. In the aviation sector, the potential for mass-casualty incidents was clear. These understandings brought about the development of a more formalized approach to risk assessments in these sectors, which then spread into process industries like refineries and oil and gas production. Risk assessment and the *layers of protection* concept began to be used. The concept of the hierarchy of controls began to be formalized in the late 1980s and early 1990s, with a number of North American standards published at that time. The whole process of looking at a structured way of dealing with hazards came out of general safety thinking at that time. If those methods are applied well, you end up with a product that is as safe as you can reasonably make it. It's that reasonableness, that's always a question at the end. There's always a lot of discussion and challenges around defining tolerable, intolerable, and acceptable risk. This debate continues to rage in safety standards development committees today.

At the end of the day, it comes down to what local laws require, what the social environment is, and how the product is being used – in the workplace or at home, with children or with the elderly, etc.

All of those different social factors have impacts on what is going to be deemed to be acceptable or tolerable given the circumstances. Risk is one of those topics that we'd like to make really cut-and-dried, and it just isn't, no matter what we do. My work and my obsession with trying to understand risk, and understand how we analyze it, and how we think about it began almost 30 years ago. And I can't say that I've yet satisfied my curiosity on the topic.

PRODUCT Showcase

Banana Skins

358 Interference increasing in the aircraft bands

Very little has happened to Section 21 recently other than a reduction of the limits in the receiver band for certain test categories and the banning of circularly polarised antennas, with both horizontal and vertical testing being required above 25MHz. However, more significant changes are proposed for the "F" revision.

The reduction of limits was required because of the increasing interference occurring, in aircraft operation, in the aircraft receiver bands. One theory proposed by the author is that this problem has been caused by the increasing use of absorber lined chambers without an accompanying reduction in the test limits. Because the RF absorber damps out the resonances of the chamber the radiated emissions can appear lower at some frequencies. In an experiment, emissions from a simulated EUT were measured in an unlined chamber as previously allowed by early versions of DO160, and the same chamber partially lined with RF absorber. A reduction in peak emissions of up to 26dB was observed in the semi-anechoic chamber.

(Extracted from: "To DO160E and Beyond" by Dr Nigel Carter of Qinetiq, EMC-UK Conference, Newbury, October 11-12 2005, pp 127-130.)

359 EMI suspected of causing electrical meltdown

Question: I have a Rover 827 Si, bought new in Spain in 186. When I travelled to the UK recently, it suffered a major electrical meltdown and was rendered immobile. It has done little more than 40,000 miles and is otherwise in first-class condition. Is there are alternative to scrapping it?

Reply: Don't despair yet. It's possible that, while parked, the car encountered electronic interference, possibly from an illegal short-wave radio, or from police or ambulance transmitters, to which its immobiliser system was vulnerable.

("Start Wreck", in 'Honest John's' motoring questions column, The Daily Telegraph Motoring Section, 18 Feb 2006, page 10.)

360 Document shredder interferes with set-top box

Operating my personal document shredder crashes my digital TV set-top box, although it is 5 metres away. Toggling the on/off button on the set-top box restores normal operation.

(Sent in by Peter Cryer, 2nd February 2006.)

361 Lack of good PCB EMC design delays product launch

The day after attending your course on Advanced PCB Design for EMC, during which you emphasised the exponential relationship between cost of modification and the date of market introduction, I went back to my OATS and tested some more customers' products. One of them emphasised the above point – EMC testing was the last thing this manufacturer thought of, and a 16dB over Class B 'surprise' was the result.

Adding ferrites to the cables made no difference as most of the noise was radiating directly off the PCB. The company has had to engage an EMC consultant to try to fix their 8 layer board, and the product shipping has been postponed.

(Sent in by Bruce Holdsworth, Sydney, Australia.)

362 When is a dozen ferrites too many?

This job started out just the same as any. With the client present I set up the EUT on the test table, warmed up the analyser and began the test. Almost immediately I could tell the emissions from the EUT were going to exceed the 40dBuV Class A 10 metre limits. A quick look at the other frequency ranges up to 1GHz confirmed this. The emissions were over the limit everywhere. Ok I said to the client, lets take a look inside and see if we can come up with a solution. Upon opening the fairly large cabinet I was astounded to see at least a dozen clip-on ferrites randomly attached to cables. I asked why so many? The reply was "We had them back at the workshop so I just put them in".

I suggested that we should remove the ferrites and take a baseline reading and start work from there. With both hands now full of ferrites, we headed back inside. Although the EUT was still failing Class A, a quick measurement showed the emission levels had not changed! I asked the client to take ONE ferrite with him and to go out to the EUT, open the cabinet, stand to the side and to carefully touch the cables inside with out disturbing their position. (Obviously this method is suitable for low voltage equipment only) while I watched the analyser. Sure enough, as soon as he placed his hand on the offending cable the analyser readings dropped. "That's it" I called to him to clip the ferrite on that cable and the rest is history. The offending cable was a noisy RS485 cable and ONE clip-on ferrite cured the entire problem.

(Another anecdote sent in by Bruce Holdsworth, Sydney, Australia.)

363 Can interference from passenger electronic devices make aircraft unsafe? – Part 1

More and more passengers are bringing cellphones, PDAs, laptops, DVD players, and game machines on board aircraft. All of these items emit radiation and have the potential to interfere with aircraft instrumentation. More and more

passengers, however, do not believe that using portable electronic devices presents a risk to passenger safety. We, on the other hand, have had our doubts that such use was safe. Over the course of three months in late 2003, we investigated the possibility that portable electronic devices interfere with a plane's safety instruments by measuring the RF spectrum inside commercial aircraft cabins. What we found was disturbing. Passengers are using cellphones, on the average, at least once per flight, contrary to FCC and FAA regulations, and sometimes during the critical flight phases of takeoff and landing.

Regulations already permit a wide variety of other portable electronic devices (PEDs) – from game machines to laptops with Wi-Fi cards, to be used in the air today. Yet our research has found that these items can interrupt the normal operation of key cockpit instruments, especially Global Positioning System (GPS) receivers, which are increasingly vital to safe landings. Two different studies by NASA further support the idea that passenger's electronic devices dangerously produce interference in a way that reduces the safety margins for critical avionics systems.

There is no smoking gun to this story: there is no definitive instance of an air accident known to have been caused by a passenger's use of an electronic device. The data support a conclusion that continued use of portable RF-emitting devices such as cellphones will, in all likelihood, someday cause an accident by interfering with critical cockpit instruments such as GPS receivers.

The study found that intermodulation between some cellular phones caused emissions in the frequency bands used by an aircraft's GPS and distance-measuring equipment. The report identified other combinations of common passenger transmitters that could potentially produce intermodulation effects in aircraft communication and navigation RF bands.

GPS-certified landing approaches are now widely used in general aviation. Though most airliners presently use instrument landing systems, use of GPS technology will increase significantly over the next few years. There are three times as many GPS-certified approaches as instrument landing system approaches in the United States.

In March 2003, acting on a number of reports from general aviation pilots that Samsung SPH-N300 cellphones had caused their GPS receivers to lose satellite lock, NASA issued a technical memorandum that described emissions from this popular phone. It reported that there were emissions in the GPS band capable of causing interference. Disturbingly, though, they were low enough to comply with FCC emissions standards.

In one telling incident, a flight crew stated that a 30-degree navigation error was immediately corrected after a passenger turned off a DVD player and that the error reoccurred when the curious crew asked the passenger to switch on the player again. Game electronics and laptops were the culprits in other reports in which the crew verified in the same way that a particular PED caused erratic navigation indications.

(The above are some paragraphs selected from: "Unsafe at any airspeed? Cellphones and other electronics are more of a risk than you think", Bill Strauss, M Granger Morgan, Jay Apt and Daniel D Stancil, IEEE Spectrum, March 2006, pp 38–43. The IEEE paper includes many references for further information.) (Editor – the USA's 2001 DOT/Volpe report – see Banana Skins 223, 227 and 230 – said that interference, either intentional or unintentional, could deny GPS access, so I am totally amazed that GPS is permitted to be relied upon for aircraft landings! Any comments from the CAA?.)

364 Can interference from passenger electronic devices make aircraft unsafe? – Part 2

While flying home from a house-hunting trip in 1981 in a turboprop Short Bros. 360, I began feverishly working out possible mortgage payments on a cheap credit card calculator. Soon the stewardess was walking down the aisle asking if anyone had anything "electrical" they were using. I replied that I had a calculator, that was electronic but not electrical – that is, it had no motors or anything. She borrowed my calculator and took it to the cockpit.

She returned in a few minutes and admonished me with words like, "Please don't use that anymore, because when you press the keys it makes the needles in the cockpit swing around." Needless to say, I complied. As pointed out in "Plane Talk about Cellphones" [Spectral Lines, March], much of the data on signals interference in aircraft is informal and hearsay – but this is my anecdote; I witnessed it myself. I vote for keeping the ban on cellphones.

(Letter from Chris Jones responding to an editorial about the article mentioned in Banana Skin No. 363 above, in "Forum" in the IEEE Spectrum, May 2006, page 4.)

The regular "Banana Skins" column was published in the EMC Journal, starting in January 1998. Alan E. Hutley, a prominent member of the electronics community, distinguished publisher of the EMC Journal, founder of the EMCIA EMC Industry Association and the EMCUK Exhibition & Conference, has graciously given his permission for In Compliance to republish this reader-favorite column. The Banana Skin columns were compiled by Keith Armstrong, of Cherry Clough Consultants Ltd, from items he found in various publications, and anecdotes and links sent in by the many fans of the column. All of the EMC Journal columns are available at: https://www.emcstandards.co.uk/emi-stories, indexed both by application and type of EM disturbance, and new ones have recently begun being added. Keith has also given his permission for these stories to be shared through In Compliance as a service to the worldwide EMC community. We are proud to carry on the tradition of sharing Banana Skins for the purpose of promoting education for EMI/EMC engineers.

Advertiser Index

Upcoming Events

February 7
ESD Best Practices for Technology Change

February 8-10
Applying Practical EMI Design and Troubleshooting Techniques
Advanced PCB Design for EMC & SI

February 13-18
European Microwave Week

March 8-11
EMC Compo

March 15-17
EMV 2022

March 27-April 1
EuCAP 2022 – The 16th European Conference on Antennas and Propagation

April 3-6
A2LA Tech Forum 2022

April 5-7
DesignCon 2022

April 19
EMC mini 2022

April 18-22
EMC Week

April 28-29
Principles of Electromagnetic Compatibility

May 8-11
2022 Asia-Pacific International Symposium on Electromagnetic Compatibility

May 9-13
Applying Practical EMI Design and Troubleshooting Techniques
Advanced PCB Design for EMC & SI
Mechanical Design for EMC

May 16-19
2022 IEEE International Instrumentation and Measurement Technology Conference (I2MTC)

May 17-19
2022 IEEE International Symposium on Product Compliance Engineering (ISPCE)

May 18-19
EMC & Compliance International Worskshop

Due to COVID-19 concerns, events may be postponed. Please check the event website for current information.

The Electrical Engineering Resource Center

Visit the EERC library, stocked with technical industry resources such as white papers and case studies intended to help engineers solve and understand challenges in the workplace.

IN COMPLIANCE

HTTPS://INCOMPLIANCEMAG.COM/EERC